RESIDENTIAL FOUNDATION REQUIREMENTS

In the past, the City of Grapevine Building Department has occasionally allowed residential foundation systems to be designed by entities other than professional engineers. This was allowed if there were no obvious expansive soil conditions at the project location. However, due to the wide range of soil conditions in Grapevine, as well as a lack of soil reports for many areas, soil conditions are not always immediately apparent.

Effective immediately, all residential foundations must be designed by a State of Texas licensed professional engineer. The foundation design must reference a report of soil conditions in the area. Engineering design will not be required for porches and patio slabs that are not carrying roof loads, nor will engineering be required for detached accessory buildings. Additionally, engineering will not be required for residential additions under 400 square feet when it can be verified that the original foundation was not designed by an engineer.

O:FORM\RES.FND.REQ.
2/16/2001

DEVELOPMENT SERVICES DEPARTMENT
The City of Grapevine • P O Box 95104 • Grapevine, Texas 76099 • (817) 410-3154
Fax (817) 410-3018 • www.ci.grapevine.tx.us

MINIMUM REQUIREMENTS
RESIDENTIAL FOUNDATION
ONE-STORY

THIS DETAIL IS VALID ONLY FOR DETACHED ACCESSORY BUILDINGS OR RESIDENTIAL ADDITIONS UNDER 400 SQ. FT. WITH NON-ENGINEERED FOUNDATIONS. ALL OTHER FOUNDATIONS SHALL BE DESIGNED BY A PROFESSIONAL ENGINEER.

FIREPLACE FOUNDATION AS THICK AS THE BEAM DEPTH

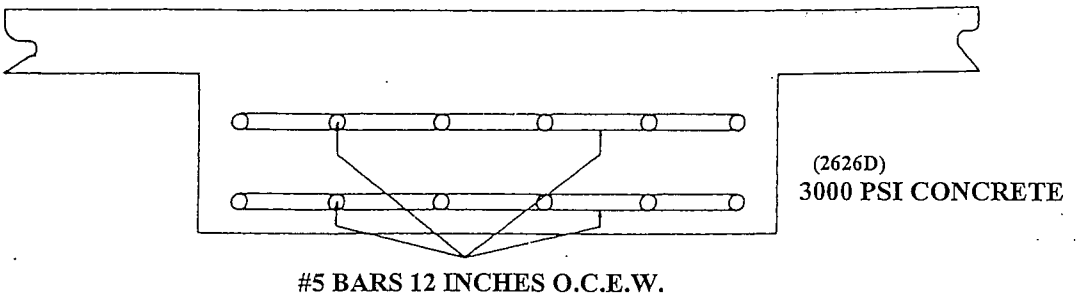

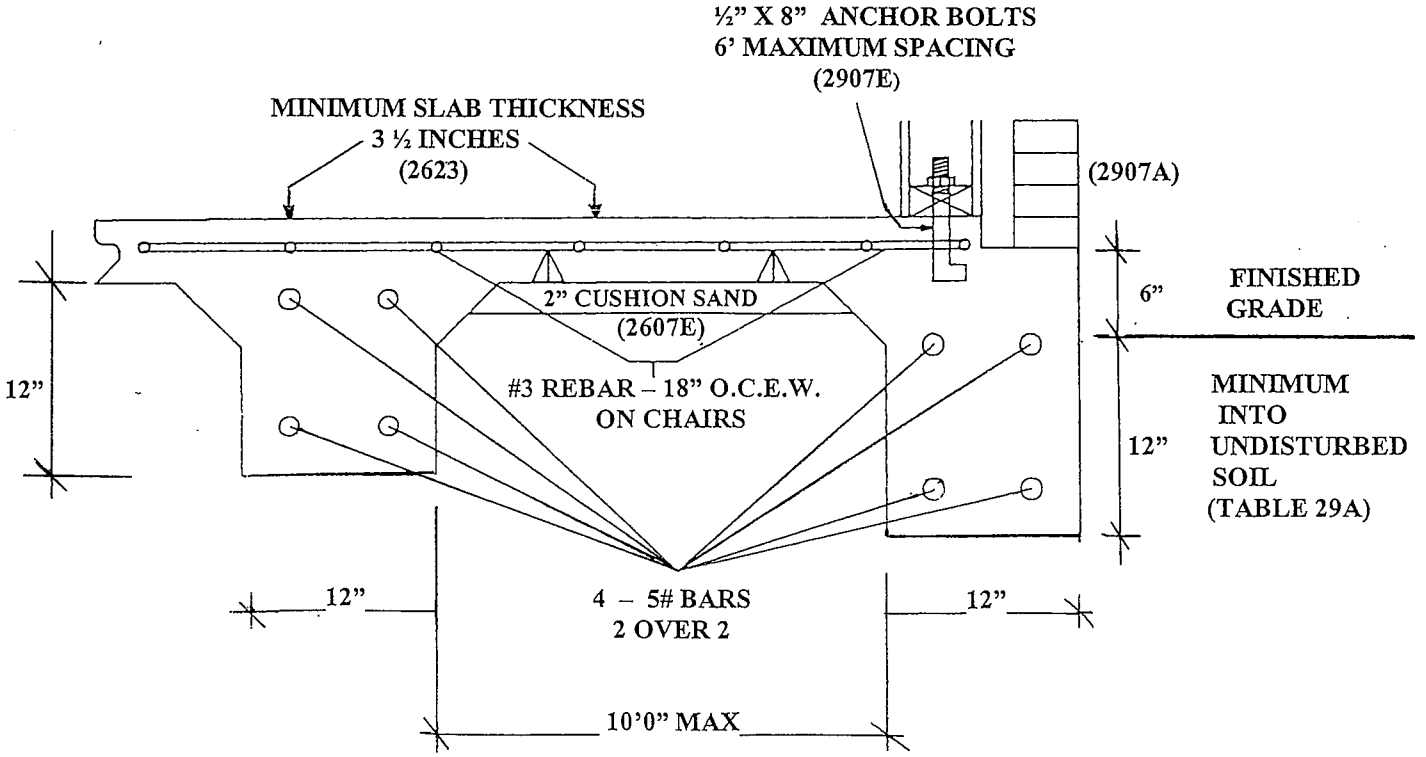

REMOVE ALL STUMPS & ROOTS TO A DEPTH OF 12 INCHES

O:FORM\RES.FND.DIAGRAM
3/12/2001