CITY OF GRAPEVINE, TEXAS

CONSTRUCTION DETAILS
AND
STANDARD DRAWINGS

JANUARY 2016

CHRIS COY
PAUL SLECHTA
DUFF O'DELL

SHARRON SPENCER
MIKE LEASE
DARLENE FREED

WILLIAM D. TATE
Mayor

BRUNO RUMBELOW
City Manager

JOHN S. LASTER, PE
Director of Public Works

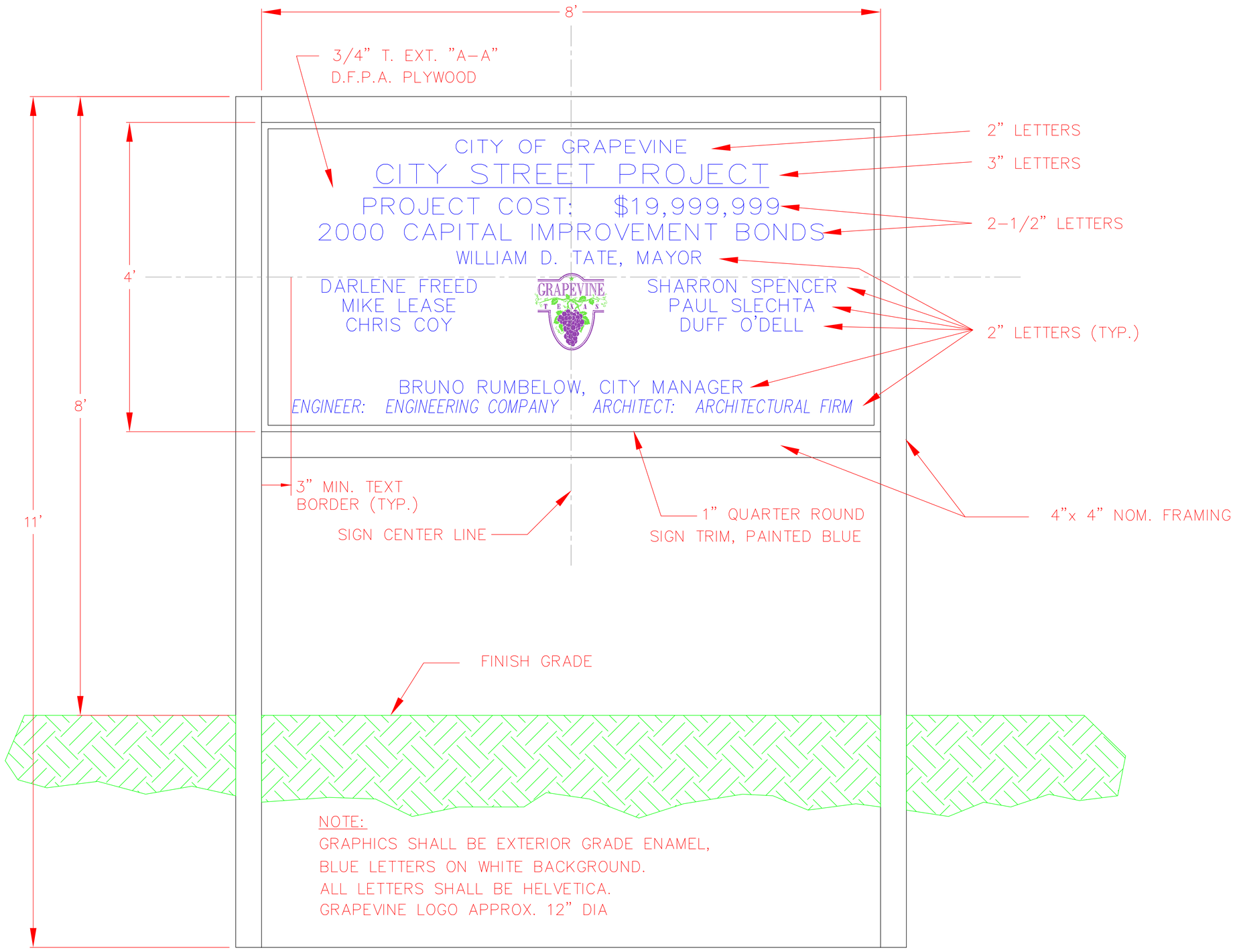

NOTE:
GRAPHICS SHALL BE EXTERIOR GRADE ENAMEL,
BLUE LETTERS ON WHITE BACKGROUND.
ALL LETTERS SHALL BE HELVETICA.
GRAPEVINE LOGO APPROX. 12" DIA

CONSTRUCTION SIGN DETAIL

CITY OF GRAPEVINE, TEXAS

CONSTRUCTION
SIGN DETAIL

REVISIONS		
1/24/12	JHT	
10/8/12	JHT	
7/3/14	JHT	
8/21/14	JHT	
1/6/16	JHT	

CREATED, 2/12/2000

SHEET NO.

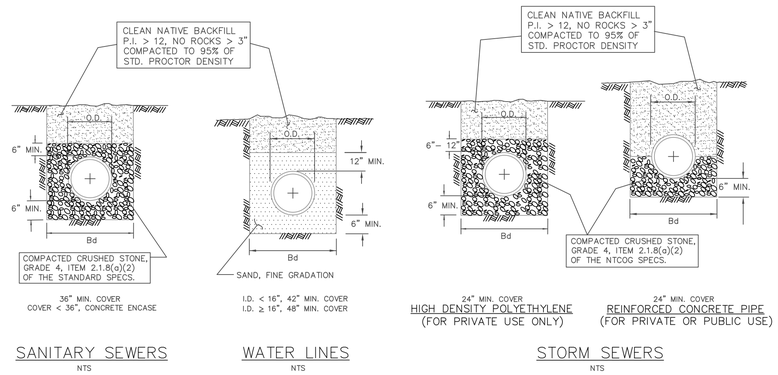

SANITARY SEWERS
NTS

WATER LINES
NTS

STORM SEWERS
NTS

NOTES:

1. O.D. = OUTSIDE DIAMETER OF PIPE
2. Bd = TRENCH WIDTH
   = O.D. + 16" FOR PIPE ≤ 24"
   = O.D. + 24" FOR PIPE > 24"
3. CLEAN NATIVE BACKFILL WITH P.I. < 12, USE FILTER FABRIC (NCTCOG ITEM 2.23) 6" UP SIDE WALLS OF TRENCH.

STANDARD DRAWING NO.
GR3010A

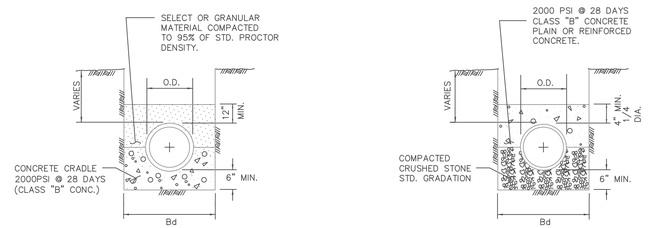

CLASS "A"
N.T.S.

2000PSI @ 28 DAYS
CLASS "B" CONCRETE CRADLE
PLAIN CONC. LF 2.8
REINF. CONC. LF 3.4 P=0.4%

CLASS "A-1"
N.T.S.

CLASS "B" CONCRETE CAP
2000PSI @ 28 DAYS
PLAIN CONC. LF 2.8
REINF. CONC. LF 3.4 P=0.4%
REINF. CONC. LF 4.8 P=1.0%

NOTES:

1. LF = LOAD FACTOR TO BE USED TO DETERMINE 3 EDGE BEARING BASED ON TYPE OF EMBEDMENT.
2. FREE-FALL OF CONCRETE NOT TO EXCEED 5 FT. MAXIMUM.
3. P = Rho FOR STEEL %

STANDARD DRAWING NO.
GR3010

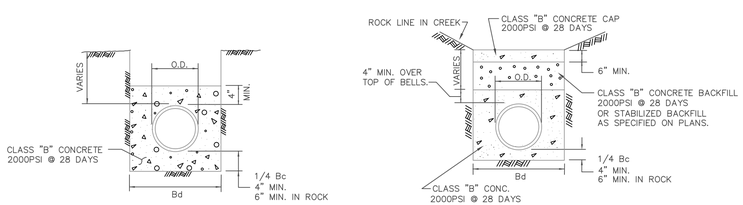

CLASS "G"
N.T.S.

CLASS "G-1"
(FOR ROCK DITCHES IN CREEKS)
N.T.S.

STANDARD DRAWING NO.
GR3060

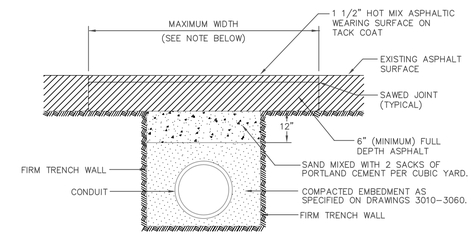

ASPHALT PAVEMENT
N.T.S.

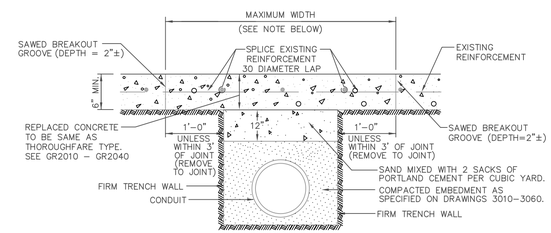

CONCRETE PAVEMENT
N.T.S.

NOTES:

1. PAYMENT TO THE CONTRACTOR FOR REPLACEMENT OF PAVEMENT AND/OR DRIVEWAYS WILL BE BASED ON ACTUAL MEASUREMENTS UP TO A MAXIMUM WIDTH EQUAL TO THE SPECIFIED MAXIMUM TRENCH WIDTH (PER STD. SPEC. ITEM 6.2.) PLUS 2 FEET. ANY EXISTING PAVEMENT DAMAGED OR REMOVED IN EXCESS OF THE MAXIMUM LIMITS SHALL BE AT THE EXPENSE OF THE CONTRACTOR.
2. WHEN REMOVING CONCRETE PAVEMENT THE CONTRACTOR SHALL ENDEAVOR TO LIMIT DAMAGE TO EXISTING REINFORCEMENT SO IT MAY BE EMPLOYED IN THE REPLACEMENT OPERATION. IF ORIGINAL REINFORCEMENT IS CUT OR BROKEN, REPLACEMENT BARS OF THE SAME SIZE SHALL BE INSTALLED BY DRILLING AND DOWELLING AS DIRECTED BY THE CITY.

PAVEMENT CUTS
REMOVAL AND REPLACEMENT

STANDARD DRAWING NO.
GR3070

GENERAL NOTES:

1. O.D. = OUTSIDE DIAMETER OF PIPE
2. Bd = TRENCH WIDTH
   = O.D. + 16" FOR PIPE ≤ 24"
   = O.D. + 24" FOR PIPE > 24"
3. CLEAN NATIVE BACKFILL WITH P.I. < 12, USE FILTER FABRIC (NCTCOG ITEM 2.23) 6" UP SIDE WALLS OF TRENCH.

EMBEDMENT DETAILS

CITY OF GRAPEVINE, TEXAS

EMBEDMENT DETAILS

REVISIONS

CREATED, 4/13/98

SHEET NO.

NOTE:
IN UNPAVED AREAS, INSTALL 2' x 2' x 6" CONCRETE VALVE PAD FLUSH WITH THE TOP OF VALVE BOX. REINFORCE WITH #3 BARS ON 6" CENTERS BOTH WAYS.

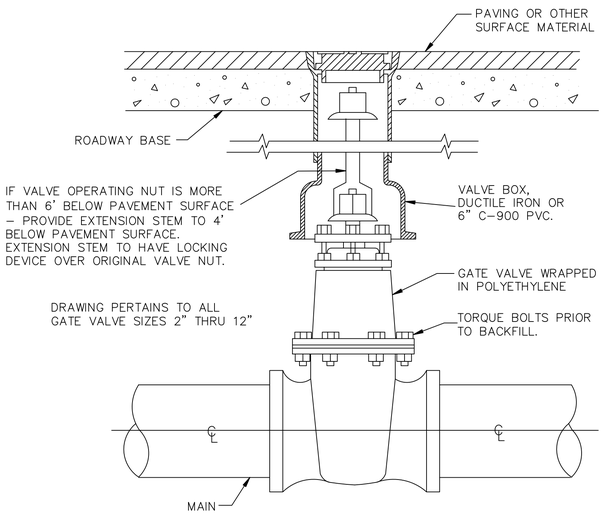

GATE VALVE 2" TO 12"
BOX & EXTENSION STEM
N.T.S.

STANDARD DRAWING NO.
GR4050

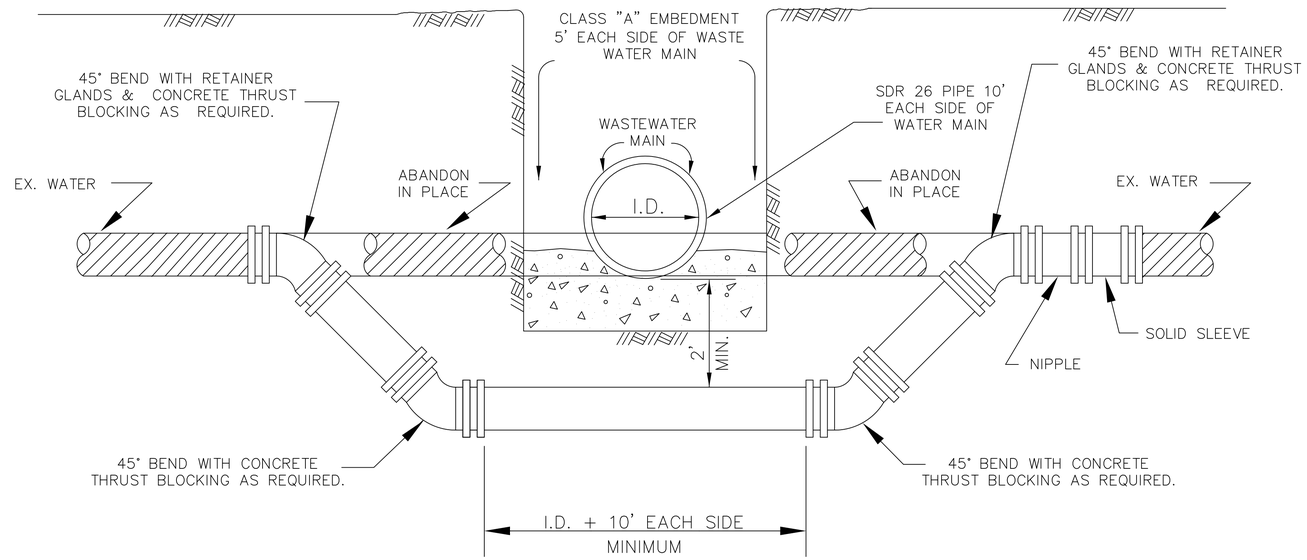

NOTE:
CONCRETE FOR THRUST BLOCKING SHALL HAVE A MIN. COMPRESSIVE STRENGTH OF 2000 PSI @ 28 DAYS (CLASS "B" CONCRETE)

N.T.S.

WATER MAIN LOWERING – BELOW WASTEWATER MAIN

STANDARD DRAWING NO.
GR4200

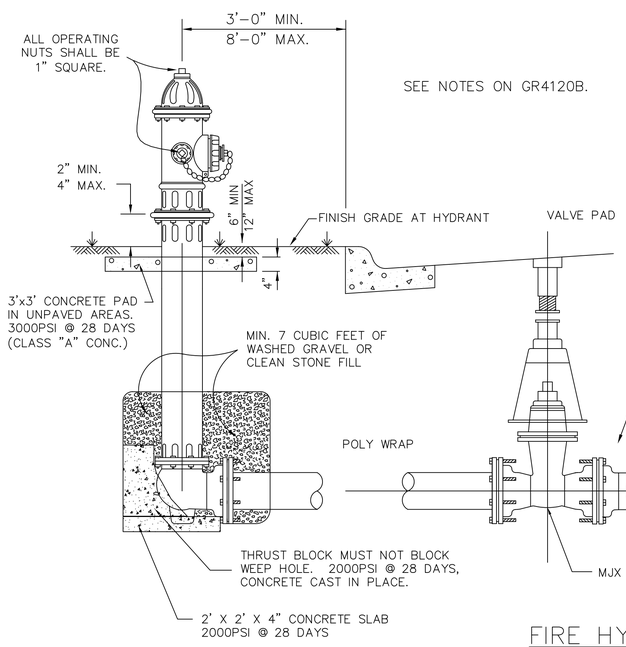

SEE NOTES ON GR4120B.

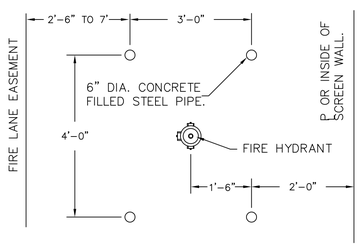

FIRE HYDRANT
GUARD POST DETAIL
N.T.S.

NOTE: FOR USE ONLY WHERE CURBS ARE NOT POSSIBLE.

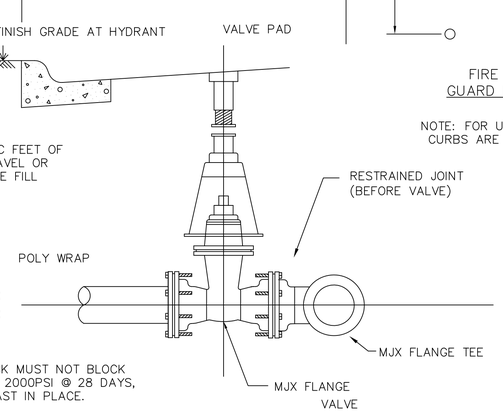

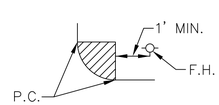

PLAN VIEW
N.T.S.

FIRE HYDRANT INSTALLATION
N.T.S.

STANDARD DRAWING NO.
GR4120A

NOTES:

1. ALL FIRE HYDRANTS SHALL CONFORM TO THE LIST CONTAINED IN THE CITY OF GRAPEVINE CONSTRUCTION MANUAL (SEE E.7.a) ALL FIRE HYDRANTS SHALL BE EQUIPPED WITH A BREAK AWAY FLANGE. FIRE HYDRANTS SHALL BE CITY APPROVED.
2. ALL JOINTS SHALL BE MECHANICAL JOINTS.
3. TYPICAL VALVE: ACTUAL VALVE LOCATION WILL DEPEND ON LOCATION OF WATER MAIN.
4. F.H. NO CLOSER THAN 18" TO EXISTING OR PROPOSED SIDEWALKS. (USUAL)
5. STANDARD BURY DEPTH 4' FEET.
6. SET FIRE HYDRANT ON THE LOT LINE EXTENDED WHEN IN MID-BLOCK.
7. F.H. SHALL BE LOCATED MINIMUM 1 FT. OUTSIDE OF THE AREA BETWEEN THE P.C.'S OF THE CORNER TURNING RADII AT INTERSECTIONS. (SEE PLAN VIEW)
8. MAXIMUM SPACING 500' IN RESIDENTIAL AREAS, 400' IN APARTMENT COMPLEXES, 300' IN COMMERCIAL OR INDUSTRIAL AREAS. SEE CONSTRUCTION MANUAL.
9. FIRE HYDRANTS SHALL NOT BE LOCATED IN SIDEWALKS OR BARRIER FREE RAMPS.
10. GUARD POST: SIX INCH (6") STEEL PIPE W/ CONCRETE, SIX FEET (6') LONG (3' ABOVE PAVING AND 3' BELOW PAVING) TO BE ENCASED IN 16" DIAMETER PIER TO A DEPTH 1' BELOW THE BOTTOM OF THE PIPE. REINFORCE WITH 2--12" NO. 6 REBAR THROUGH THE PIPE INTO THE CONCRETE PIER. PIPES TO BE PAINTED ALUMINUM.
11. FIRE HYDRANT COLOR: ALUMINUM WITH RED CAPS AND BONNET.
12. USE FIRE HYDRANT WITH 4" STEAMER.

WATER DETAILS

CITY OF GRAPEVINE, TEXAS

WATER DETAILS

REVISIONS		
JHT	9/9/04	Oper & Engr.
map	10/1/12	Oper & Engr.
JHT	10/11/12	Oper & Engr.
CREATED, 4/13/98		SHEET NO.

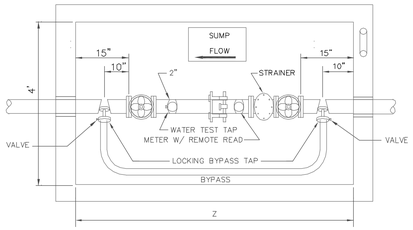

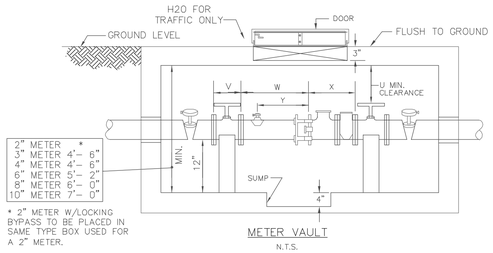

* 2" METER W/LOCKING BYPASS TO BE PLACED IN SAME TYPE BOX USED FOR A 2" METER.

METER VAULT

N.T.S.

METER VAULT													
DOMESTIC							IRRIGATION						
METER SIZE	U	V	W	X	Y	Z	METER SIZE	U	V	W	X	Y	Z
3"	25"	8"	11-1/2"	24"	-	6'-10"	3"	25"	8"	16-1/2"	19"	9"	6'-10"
4"	22"	9"	13-1/2"	29"	-	7'-7"	4"	22"	9"	19-1/2"	23"	10"	7'-7"
6"	26"	10-1/2"	13-1/2"	33"	-	8'-2"	6"	26"	10-1/2"	19-1/2"	27"	13"	8'-2"
							8"	31"	11-1/2"	25-1/2"	30"	17"	9'-1"
							10"	37"	13"	29-1/2"	41"	21"	10'-7"

STANDARD DRAWING NO.
GR4150

DETAILS FOR 3" AND ABOVE METERS

MATERIALS LIST		
PART NO.	QUANTITY	DESCRIPTION
1	1 EA.	8" FLANGED COUPLING METER ADAPTER
2	1 EA.	8" DETECTOR CHECK VALVE WITH 5/8" BY-PASS METER
3	1 EA.	8" X 12" D.I. NIPPLE M.J. X F.
4	1 EA. 1 EA. 1 EA.	PRECAST METER VAULT VAULT FLOOR (NOT SHOWN) 36" X 48" ACCESS HATCH (NOT SHOWN)

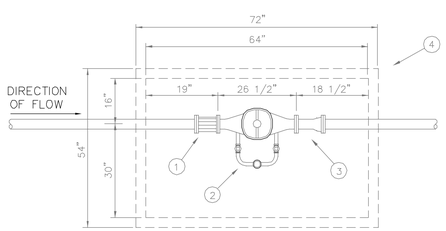

DETECTOR METER IS TO BE AT GRADE IN SAME TYPE BOX AS 1" METER.

8" DETECTOR CHECK SERVICE WITH 8" METER

N.T.S.

STANDARD DRAWING NO.
GR4160

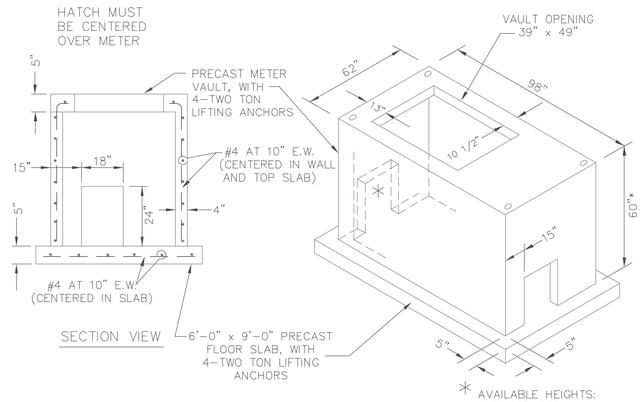

* AVAILABLE HEIGHTS: 36", 48", 60" USE OF WHICH IS SPECIFIED BY CITY

F.M. METER VAULT

N.T.S.

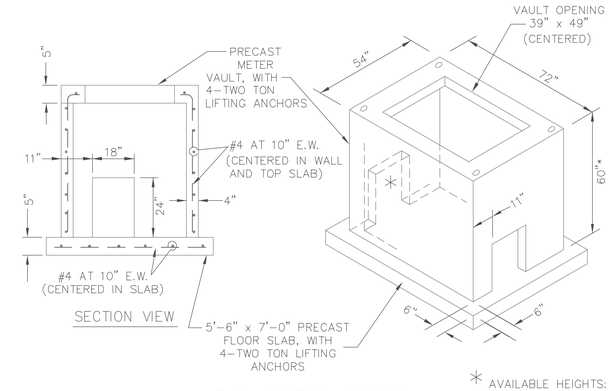

* AVAILABLE HEIGHTS: 36", 48", 60" USE OF WHICH IS SPECIFIED BY CITY

D.C. METER VAULT

N.T.S.

LARGE SERVICE METER PRECAST VAULT

STANDARD DRAWING NO.
GR4190B

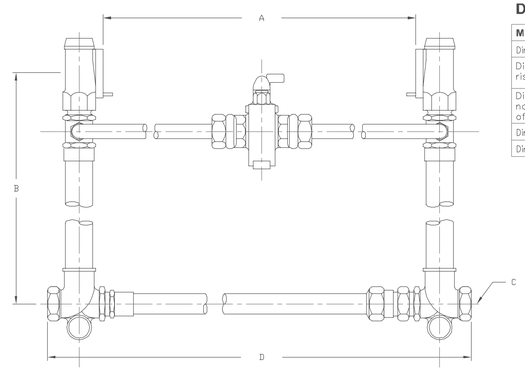

DIMENSIONS

METER SIZE	1 ½"	2"
Dimension "A"	13.25"	17.25"
Dimension "B" riser height	12", 15", 18", 21", 24", 27"	12", 15", 18", 21", 24", 27"
Dimension "C" nominal pipe size of inlet & outlet	2"	2"
Dimension "D"	22.63"	26.63"
Dimension "E"	7.25"	7.25"

MUELLER H-1423-99000

N.T.S.

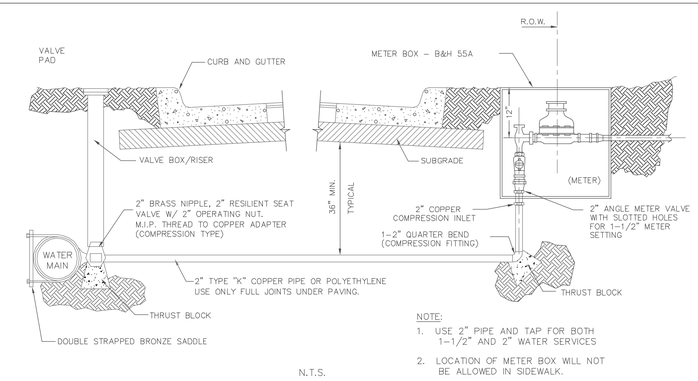

NOTE:
1. USE 2" PIPE AND TAP FOR BOTH 1-1/2" AND 2" WATER SERVICES
2. LOCATION OF METER BOX WILL NOT BE ALLOWED IN SIDEWALK.

N.T.S.

WATER SERVICE INSTALLATION - 1 1/2" OR 2" LINE

COMMERCIAL DOMESTIC MUST HAVE SETTER MUELLER MH 14239900015

STANDARD DRAWING NO.
GR4140

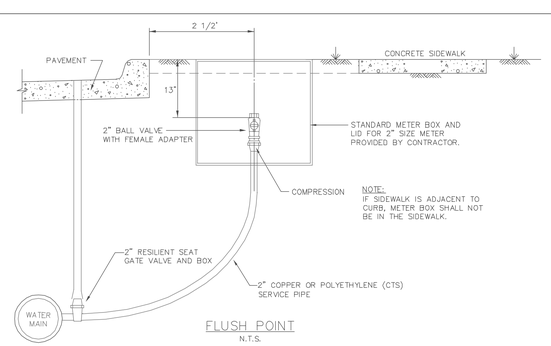

NOTE:
IF SIDEWALK IS ADJACENT TO CURB, METER BOX SHALL NOT BE IN THE SIDEWALK.

FLUSH POINT

N.T.S.

FLUSH POINT INSTALLATION - TYPE 1

STANDARD DRAWING NO.
GR4110

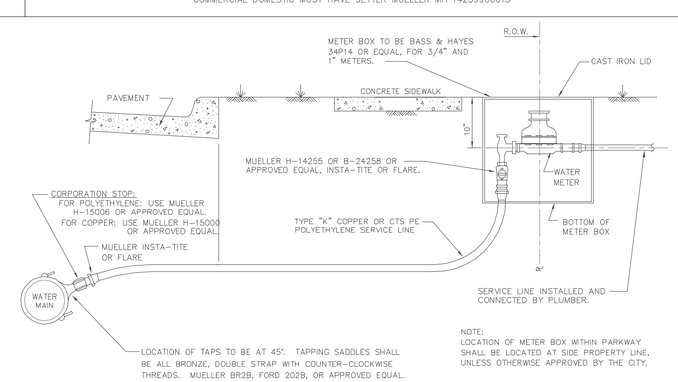

NOTE:
LOCATION OF METER BOX WITHIN PARKWAY SHALL BE LOCATED AT SIDE PROPERTY LINE, UNLESS OTHERWISE APPROVED BY THE CITY.

N.T.S.

WATER SERVICE INSTALLATION - 1" LINE

STANDARD DRAWING NO.
GR4130

WATER DETAILS

GRAPEVINE TEXAS

CITY OF GRAPEVINE, TEXAS

WATER DETAILS

REVISIONS		
JHT	9/9/04	Oper & Engr.
JHT	12/20/06	Oper & Engr.
JHT	4/29/09	Oper & Engr.
CREATED, 4/13/98		SHEET NO.

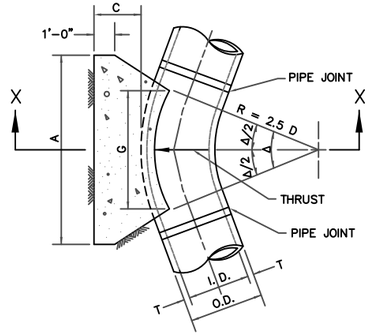

PLAN
N.T.S.

REFER TO
STD. DWG. No. 4040
FOR GENERAL NOTES.

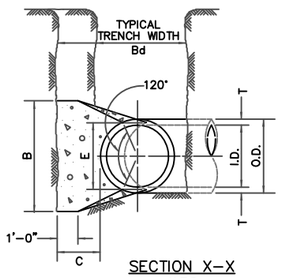

SECTION X–X
N.T.S.

HORIZONTAL THRUST BLOCK AT PIPE BEND

STANDARD DRAWING NO.
4010A

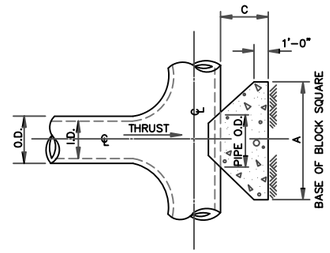

PLAN OF TEE THRUST BLOCK
N.T.S.

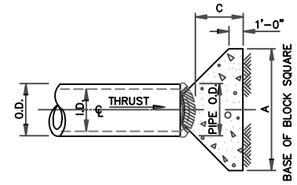

PLAN OF PLUG THRUST BLOCK
N.T.S.

REFER TO
STD. DWG. No. 4040
FOR GENERAL NOTES.

I.D. (IN.)	THRUST (TONS)	C (FT.)	EARTH A (FT.)	EARTH VOL. (C.Y.)	ROCK A (FT.)	ROCK VOL. (C.Y.)
4,6,8	5.1	1.5	2.5	0.3	2.0	0.2
10,12	11.3	1.5	3.5	0.6	2.5	0.3
16,18	25.5	2.0	5.5	1.6	4.0	0.9
20	31.5	2.0	6.0	1.9	4.0	0.9
24	45.2	2.5	7.0	3.1	5.0	1.7
30	53.0	3.0	7.5	4.1	5.5	2.4
36	76.3	4.0	9.0	7.3	6.5	4.2
42	104.0	4.5	10.5	11.0	7.5	6.2
48	136.0	5.0	12.0	15.6	8.5	8.7
54	172.0	5.5	13.5	21.4	9.5	11.9
60	212.0	6.0	15.0	28.4	10.5	15.7
66	257.0	6.5	16.5	36.8	11.5	20.5
72	305.0	7.5	17.5	47.2	12.5	27.2
78	358.0	8.0	19.0	58.9	13.5	33.7
84	416.0	8.5	20.5	72.3	14.5	41.2
90	477.0	9.0	22.0	87.7	15.5	49.7
96	543.0	9.5	23.5	104.8	16.5	61.0

HORIZONTAL THRUST BLOCK AT TEES AND PLUGS

STANDARD DRAWING NO.
4020

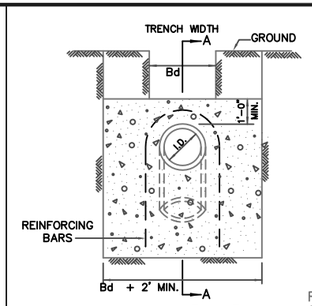

ELEVATION "B–B"
N.T.S.

REFER TO
STD. DWG. No. 4040
FOR GENERAL NOTES.

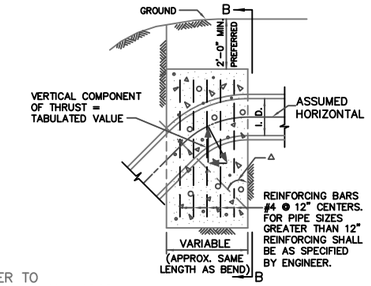

SECTION "A–A"
N.T.S.

Δ →	11.25°		22.50°		30°		45°		67.50°		90°		← Δ
I.D. (IN.)	THRUST (TONS)	VOL. (C.Y.)	THRUST (TONS)	VOL. (C.Y.)	THRUST (TONS)	VOL. (C.Y.)	THRUST (TONS)	VOL. (C.Y.)	THRUST (TONS)	VOL. (C.Y.)	THRUST (TONS)	VOL. (C.Y.)	I.D. (IN.)
4,6,8	1.0	0.5	2.0	1.0	2.5	1.3	3.6	1.8	4.6	2.3	5.0	2.5	4,6,8
10,12	2.2	1.1	4.3	2.2	5.7	2.8	8.0	4.0	10.5	5.2	11.3	5.7	10,12
16,18	5.0	2.5	9.7	4.9	12.7	6.4	18.0	9.0	23.5	11.8	25.5	12.7	16,18
20	6.1	3.1	12.0	6.0	15.7	7.9	22.2	11.1	29.2	14.5	31.4	15.7	20
24	8.2	4.4	17.3	8.7	22.6	11.3	32.0	16.0	41.8	20.9	45.2	22.6	24
30	10.5	5.2	20.3	10.1	26.5	13.3	37.5	18.8	49.0	24.5	53.1	26.5	30
36	14.9	7.5	29.2	14.6	38.2	19.1	54.0	27.0	70.5	35.3	76.4	38.2	36
42	20.3	10.1	39.8	19.9	52.0	26.0	73.5	36.7	96.0	48.0	104.0	52.0	42
48	26.5	13.2	51.9	26.0	67.9	33.9	96.0	48.0	126.0	62.7	136.0	67.9	48
54	33.5	16.8	65.7	32.9	85.9	42.9	122.0	60.7	159.0	79.4	172.0	85.9	54
60	41.4	20.7	81.2	40.6	106.0	53.0	150.0	75.0	196.0	98.0	212.0	106.0	60
66	50.1	25.0	98.2	49.1	128.0	64.2	182.0	90.7	237.0	119.0	257.0	128.0	66
72	59.6	29.8	117.0	58.4	153.0	76.3	216.0	108.0	282.0	141.0	305.0	153.0	72
78	69.9	35.0	137.0	68.6	179.0	90.0	254.0	127.0	331.0	166.0	358.0	179.0	78
84	81.1	40.5	159.0	79.5	208.0	104.0	294.0	147.0	384.0	192.0	416.0	208.0	84
90	93.1	46.5	183.0	91.3	239.0	119.0	337.0	169.0	441.0	221.0	477.0	239.0	90
96	106.0	53.0	208.0	104.0	272.0	136.0	384.0	192.0	502.0	251.0	543.0	272.0	96

VERTICAL THRUST BLOCK AT PIPE BEND

STANDARD DRAWING NO.
4030

THRUST BLOCK DETAILS

I.D. (IN.)	T (IN.)	Δ = 11.25° C (FT.)	Δ = 22.50° C (FT.)	E (FT.)
4,6,8	0.4	1.5	1.5	0.9
10,12	0.5	1.5	1.5	1.2
16,18	0.6	1.5	1.5	1.6
20	0.7	1.5	1.5	1.8
24	0.9	1.5	1.5	2.1
30	2.9	1.5	1.9	2.6
36	4.5	1.5	2.3	3.3
42	5.0	1.8	2.6	3.8
48	5.5	2.0	3.0	4.3
54	6.0	2.3	3.4	4.8
60	6.5	2.5	3.8	5.3
66	6.8	2.8	4.1	5.7
72	7.5	3.0	4.5	6.3
78	7.5	3.3	4.9	6.7
84	8.0	3.5	5.3	7.2
90	8.5	3.8	5.6	7.7
96	9.0	4.0	6.0	8.2

I.D. (IN.)	Δ = 11.25° G (FT.)	THRUST (TONS)	EARTH A (FT.)	EARTH B (FT.)	EARTH VOL. (C.Y.)	ROCK A (FT.)	ROCK B (FT.)	ROCK VOL. (C.Y.)
4,6,8	0.4	1.0	1.0	1.5	0.1	1.0	1.0	0.1
10,12	0.6	2.2	1.5	1.5	0.1	1.0	1.5	0.1
16,18	0.8	5.0	2.0	2.5	0.3	1.5	2.0	0.2
20	0.9	6.2	2.0	3.5	0.4	1.5	3.0	0.3
24	1.1	8.9	3.0	3.5	0.5	1.5	3.0	0.3
30	1.4	10.4	3.0	3.5	0.6	2.0	3.5	0.4
36	1.7	15.0	3.5	4.5	0.9	2.0	4.0	0.5
42	1.9	20.4	4.5	5.0	1.5	2.5	5.0	0.8
48	2.2	26.6	4.5	6.0	2.0	2.5	6.0	1.1
54	2.5	33.7	6.0	6.0	3.0	3.0	6.0	1.4
60	2.7	41.6	6.0	7.0	3.8	3.0	7.0	1.8
66	3.0	50.3	6.5	8.0	5.1	3.5	8.0	2.7
72	3.3	59.9	7.5	8.0	6.3	4.0	8.0	3.3
78	3.6	70.2	8.0	9.0	8.1	4.0	9.0	3.9
84	3.8	81.5	8.5	10.0	10.3	4.5	10.0	5.3
90	4.1	93.5	9.5	10.0	12.2	5.0	10.0	6.3
96	4.4	106.4	10.0	11.0	15.0	5.0	11.0	7.4

I.D. (IN.)	Δ= 22.50° G (FT.)	THRUST (TONS)	EARTH A (FT.)	EARTH B (FT.)	EARTH VOL. (C.Y.)	ROCK A (FT.)	ROCK B (FT.)	ROCK VOL. (C.Y.)
4,6,8	0.8	2.0	1.5	1.5	0.1	1.0	1.0	0.1
10,12	1.1	4.4	2.0	2.5	0.3	1.5	1.5	0.1
16,18	1.6	9.9	3.0	3.5	0.6	2.0	2.5	0.3
20	1.8	12.3	3.5	3.5	0.7	2.0	3.0	0.4
24	2.2	17.7	4.0	4.5	1.0	3.0	3.5	0.5
30	2.7	20.7	5.0	4.5	1.5	3.0	4.0	0.8
36	3.3	29.8	5.5	5.5	2.3	4.0	4.0	1.3
42	3.8	40.5	7.0	6.0	3.9	4.5	5.0	2.1
48	4.4	52.9	8.0	7.0	5.7	4.5	6.0	2.8
54	4.9	67.0	9.0	8.0	8.0	6.0	6.0	4.1
60	5.5	82.7	9.5	9.0	10.6	6.0	7.0	5.3
66	6.0	100.1	10.5	10.0	14.1	6.5	8.0	7.2
72	6.6	119.1	11.0	11.0	17.6	7.5	8.0	9.1
78	7.1	139.8	12.0	12.0	22.5	8.0	9.0	11.7
84	7.6	162.1	13.0	12.5	27.2	8.5	10.0	14.8
90	8.2	186.1	14.0	13.5	33.7	9.5	10.0	17.7
96	8.7	211.7	15.0	14.5	41.2	10.0	11.0	21.8

HORIZONTAL THRUST BLOCK AT PIPE BEND
DELTA = 11.25° AND 22.50°

STANDARD DRAWING NO.
GR4010B

1. CONCRETE FOR BLOCKING SHALL HAVE A MINIMUM COMPRESSIVE STRENGTH OF 2000 PSI @ 28 DAYS (CLASS "B" CONCRETE).
2. ALL CALCULATIONS ARE BASED ON INTERNAL PRESSURE OF 200 PSI FOR DUCTILE IRON, P.V.C., AND 150 PSI FOR CONCRETE PIPE.
3. VOLUMES OF THRUST BLOCKS ARE NET VOLUMES OF CONCRETE TO BE FURNISHED. THE CORRESPONDING WEIGHT OF THE CONCRETE IS EQUAL TO OR GREATER THAN THE VERTICAL COMPONENT OF THE THRUST ON THE VERTICAL BEND.
4. WALL THICKNESS (T) ASSUMED HERE FOR ESTIMATING PURPOSES ONLY.
5. POUR CONCRETE FOR BLOCK AGAINST UNDISTURBED EARTH.
6. DIMENSIONS MAY BE VARIED AS REQUIRED BY FIELD CONDITIONS WHERE AND AS DIRECTED BY THE CITY. THE VOLUME OF CONCRETE BLOCKING SHALL NOT BE LESS THAN SHOWN HERE.
7. THE SOIL BEARING PRESSURES ARE BASED ON 1000 LBS./S.F. IN SOIL AND 2000 LBS./S.F. IN ROCK.
8. USE POLYETHYLENE WRAP OR EQUAL BETWEEN CONCRETE AND BEND, TEE, OR PLUG TO PREVENT THE CONCRETE FROM STICKING TO IT.
9. CONCRETE SHALL NOT EXTEND BEYOND JOINTS.

THRUST BLOCK – GENERAL NOTES

STANDARD DRAWING NO.
GR4040

I.D. (IN.)	Δ = 30° G (FT.)	THRUST (TONS)	EARTH A (FT.)	EARTH B (FT.)	EARTH VOL. (C.Y.)	ROCK A (FT.)	ROCK B (FT.)	ROCK VOL. (C.Y.)
4,6,8	1.0	2.6	2.0	1.5	0.2	1.0	1.5	0.1
10,12	1.5	5.9	2.5	2.5	0.3	2.0	1.5	0.2
16,18	2.2	13.2	3.5	4.0	0.8	2.5	3.0	0.4
20	2.4	16.3	4.5	4.0	1.0	3.0	3.0	0.5
24	2.9	23.4	6.0	4.0	1.4	3.5	3.5	0.7
30	3.6	27.5	6.5	5.0	1.9	3.5	4.0	0.9
36	4.4	39.5	7.0	6.0	3.4	4.5	4.5	1.6
42	5.1	53.8	8.0	7.0	5.1	5.5	5.0	2.5
48	5.8	70.3	9.0	8.0	7.4	6.0	6.0	3.7
54	6.5	89.0	10.0	9.0	10.3	7.0	6.5	5.3
60	7.3	110.0	11.0	10.0	13.9	7.5	7.5	7.3
66	8.0	132.9	12.5	11.0	18.9	8.5	8.0	9.6
72	8.7	158.2	13.5	12.0	24.0	9.0	9.0	12.3
78	9.4	185.6	14.5	13.0	30.0	10.0	9.5	15.6
84	10.1	215.3	15.5	14.0	37.1	10.5	10.5	19.5
90	10.9	247.1	16.5	15.0	45.0	11.5	11.0	23.9
96	11.6	281.2	18.0	16.0	55.5	12.5	11.5	28.9

I.D. (IN.)	Δ = 45° G (FT.)	THRUST (TONS)	EARTH A (FT.)	EARTH B (FT.)	EARTH VOL. (C.Y.)	ROCK A (FT.)	ROCK B (FT.)	ROCK VOL. (C.Y.)
4,6,8	1.5	3.9	2.0	2.0	0.2	1.5	1.5	0.1
10,12	2.2	8.7	3.5	2.5	0.5	2.0	2.5	0.3
16,18	3.2	19.5	4.5	4.5	1.2	3.0	3.5	0.6
20	3.6	24.1	5.5	4.5	1.5	3.5	3.5	0.7
24	4.3	34.6	8.0	4.5	2.3	4.5	4.0	1.1
30	5.4	40.6	8.5	5.0	3.2	5.5	4.0	1.6
36	6.5	58.5	10.0	6.0	5.3	6.5	4.5	2.6
42	7.5	79.6	11.5	7.0	8.1	8.0	5.0	4.2
48	8.6	104.0	13.0	8.0	11.9	9.0	6.0	6.3
54	9.7	131.5	15.0	9.0	17.1	10.5	6.5	8.9
60	10.7	162.4	16.5	10.0	23.1	11.0	7.5	12.0
66	11.8	196.5	18.0	11.0	30.1	12.0	8.5	16.2
72	12.9	233.9	19.5	12.0	38.6	14.0	8.5	20.7
78	13.9	274.5	21.5	13.0	49.8	14.5	9.5	25.9
84	15.0	318.4	23.0	14.0	61.2	15.5	10.5	32.6
90	16.1	365.5	24.5	15.0	74.5	17.5	10.5	39.6
96	17.1	415.6	26.0	16.0	89.5	18.5	11.5	48.5

HORIZONTAL THRUST BLOCK AT PIPE BEND
DELTA = 30.00° AND 45.00°

STANDARD DRAWING NO.
GR4010C

I.D. (IN.)	Δ = 67.50° G (FT.)	THRUST (TONS)	EARTH A (FT.)	EARTH B (FT.)	EARTH VOL. (C.Y.)	ROCK A (FT.)	ROCK B (FT.)	ROCK VOL. (C.Y.)
4,6,8	2.1	5.6	3.0	2.0	0.3	2.0	1.5	0.2
10,12	3.1	12.6	5.5	2.5	0.8	3.5	2.0	0.4
16,18	4.7	28.3	7.5	4.0	1.9	5.5	3.0	0.9
20	5.2	34.9	9.0	4.0	2.3	5.5	3.5	1.2
24	6.2	50.3	11.5	4.5	3.5	6.5	4.0	1.6
30	7.8	58.9	12.0	5.0	4.8	7.5	4.0	2.2
36	9.4	84.9	14.5	6.0	8.2	9.5	4.5	3.8
42	10.9	115.5	17.0	7.0	12.8	11.0	5.5	6.3
48	12.5	150.9	19.0	8.0	18.4	13.0	6.0	9.2
54	14.0	191.0	21.5	9.0	26.0	15.0	6.5	12.9
60	15.6	235.8	24.0	10.0	35.6	16.0	7.5	17.6
66	17.1	285.3	26.0	11.0	46.0	18.0	8.0	23.0
72	18.7	339.5	28.5	12.0	57.8	19.0	9.0	28.4
78	20.2	398.5	31.0	13.0	75.7	21.0	9.5	37.4
84	21.8	462.1	33.5	14.0	94.7	22.0	10.5	46.5
90	23.3	530.5	35.5	15.0	114.4	24.5	11.0	58.2
96	24.9	603.6	38.0	16.0	138.9	25.5	12.0	70.0

I.D. (IN.)	Δ = 90° G (FT.)	THRUST (TONS)	EARTH A (FT.)	EARTH B (FT.)	EARTH VOL. (C.Y.)	ROCK A (FT.)	ROCK B (FT.)	ROCK VOL. (C.Y.)
4,6,8	2.7	7.1	5.0	1.5	0.4	2.0	2.0	0.2
10,12	4.0	16.0	6.5	2.5	1.0	3.5	2.5	0.5
16,18	6.0	36.0	9.0	4.0	2.4	4.5	4.0	1.0
20	6.6	44.4	10.0	4.5	3.1	6.0	4.0	1.5
24	7.9	64.0	14.5	4.5	5.0	8.0	4.0	2.1
30	9.9	75.0	15.0	5.0	6.7	10.0	4.0	3.3
36	11.9	108.0	18.0	6.0	11.4	12.0	4.5	5.3
42	13.9	147.0	21.0	7.0	17.8	14.0	5.5	8.7
48	15.9	192.0	24.0	8.0	26.2	16.0	6.0	12.4
54	17.9	243.0	27.0	9.0	36.9	18.0	7.0	18.1
60	19.9	299.8	30.0	10.0	50.3	20.0	7.5	24.0
66	21.8	362.8	33.0	11.0	66.2	22.0	8.5	32.5
72	23.8	431.8	36.0	12.0	85.6	24.0	9.0	41.0
78	25.7	506.7	39.0	13.0	108.2	26.0	10.0	53.2
84	27.7	587.7	42.0	14.0	134.4	28.0	10.5	64.8
90	29.0	674.6	45.0	15.0	164.9	30.0	11.5	81.2
96	31.6	767.5	48.0	16.0	199.0	32.0	12.0	95.1

HORIZONTAL THRUST BLOCK AT PIPE BEND
DELTA = 67.50° AND 90.00°

STANDARD DRAWING NO.
GR4010D

GRAPEVINE TEXAS

CITY OF GRAPEVINE, TEXAS

THRUST BLOCK DETAILS

REVISIONS		
JHT	8–24–10	
CREATED, 4/13/98		SHEET NO.

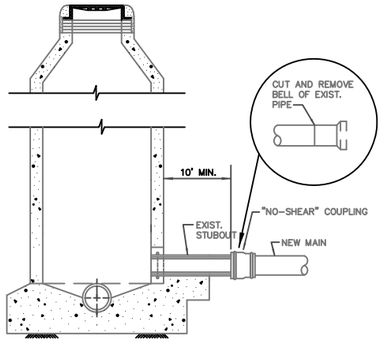

AT STUBOUT
N.T.S.

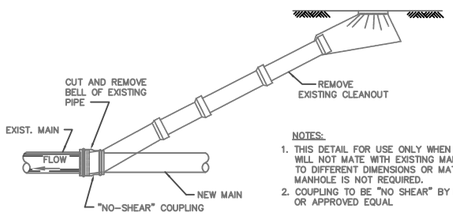

NOTES:
1. THIS DETAIL FOR USE ONLY WHEN NEW MAIN WILL NOT MATE WITH EXISTING MAIN JOINT DUE TO DIFFERENT DIMENSIONS OR MATERIALS AND A MANHOLE IS NOT REQUIRED.
2. COUPLING TO BE "NO SHEAR" BY DFW INDUSTRIES OR APPROVED EQUAL

AT CLEANOUT
N.T.S.

WASTEWATER MAIN TIE-IN AT CLEANOUT OR M.H. STUBOUT

STANDARD DRAWING NO.
GR5010

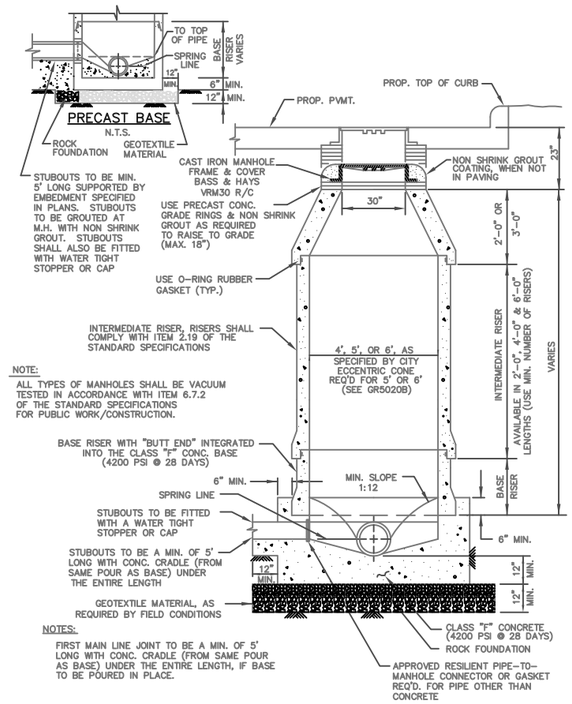

NOTE:
ALL TYPES OF MANHOLES SHALL BE VACUUM TESTED IN ACCORDANCE WITH ITEM 6.7.2 OF THE STANDARD SPECIFICATIONS FOR PUBLIC WORK/CONSTRUCTION.

NOTES:
FIRST MAIN LINE JOINT TO BE A MIN. OF 5' LONG WITH CONC. CRADLE (FROM SAME POUR AS BASE) UNDER THE ENTIRE LENGTH, IF BASE TO BE POURED IN PLACE.

WASTEWATER MANHOLE PRECAST

STANDARD DRAWING NO.
GR5020A

CONCRETE CONE ⇦ RIM OPTIONS ⇨ REINFORCED CONCRETE SLAB
N.T.S.

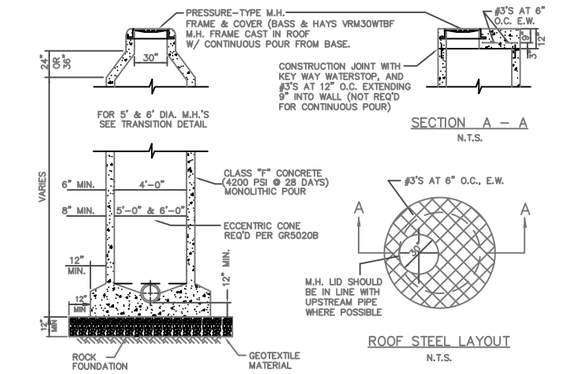

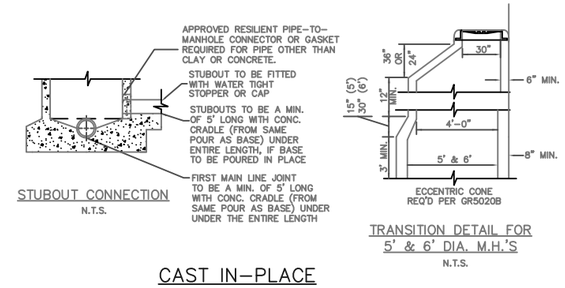

CAST IN-PLACE WASTEWATER MANHOLE PRESSURE-TYPE

STANDARD DRAWING NO.
GR5050

CITY OF GRAPEVINE, TEXAS

SANITARY SEWER DETAILS

GRAPEVINE TEXAS

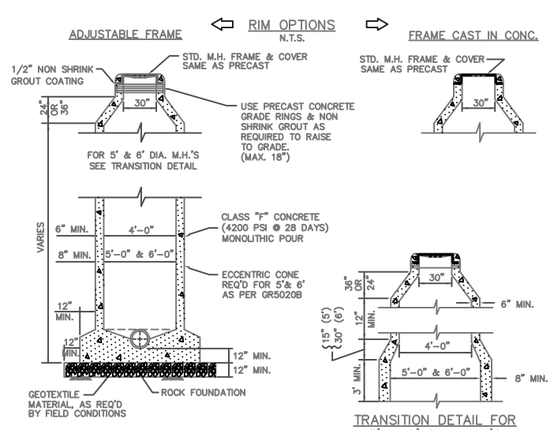

NOTES
1. WHERE M.H.'S ARE IN "PROPOSED" PAVING FRAME & COVER SHALL BESET 23" BELOW THE PROPOSED PAVEMENT GRADE.
2. IF FALSE M.H. BOTTOMS ARE REQUIRED, THEY SHALL BE CONSTRUCTED, INSTALLED AND REMOVED PER STD. DWG. NO. GR5100.

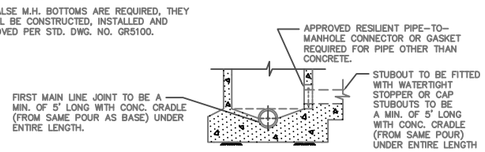

STUBOUT CONNECTION
N.T.S.

WASTEWATER MANHOLE CAST-IN-PLACE

STANDARD DRAWING NO.
GR5030

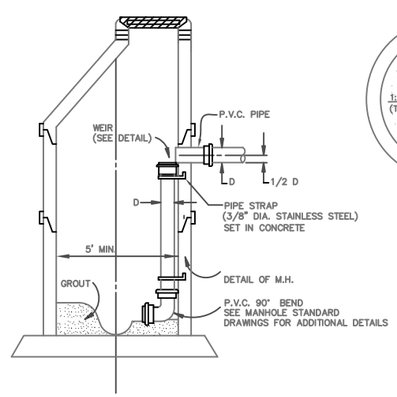

ELEVATION
N.T.S.

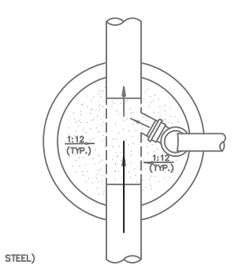

PLAN
N.T.S.

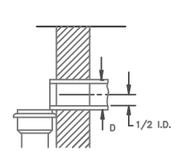

WEIR DETAIL
N.T.S.

NOTE:
1. DROP MANHOLE IS REQUIRED WHEN INFLOW PIPE IS MORE THAN 30" ABOVE THE MANHOLE INVERT.
2. FLOW LINE OF SURCHARGE LINE NORMALLY PLACED AT TOP OF EXISTING WASTEWATER LINE UNLESS UNLESS NOTED OTHERWISE ON PLANS.

WASTEWATER MANHOLE INSIDE DROP CONNECTION

STANDARD DRAWING NO.
GR5080-A

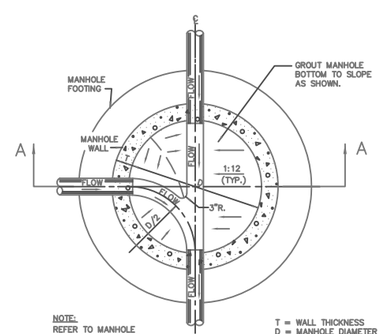

PLAN
N.T.S.

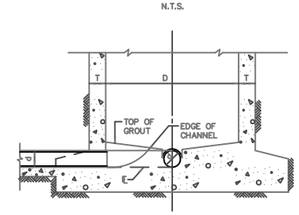

SECTION A-A
N.T.S.

WASTEWATER MANHOLE LINE INTERSECTION

STANDARD DRAWING NO.
5090

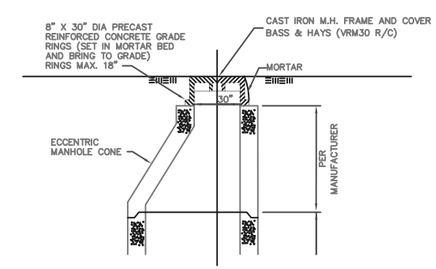

NOTE:
CONSTRUCTION SHALL BE THE SAME AS GR5020A.

OFFSET TOP FOR PRECAST - ECCENTRIC CONCRETE PIPE MANHOLE

STANDARD DRAWING NO.
GR5020B

SANITARY SEWER DETAILS - 1
MANHOLES & TIE-IN

REVISIONS		
JHT	9/9/04	Oper & Engr.
JR	3/14/11	Oper & Engr.
CREATED, 4/13/98		SHEET NO.

KEY:

1. WASTERWATER MAIN
2. MAIN SIZE X 4" WYE
3. 4" WASTEWATER LAT. (LENGTH VARIES)
4. 4" X 4" TEE OR WYE.
5. 4" STACK (LENGTH VARIES)
6. 4" WASTEWATER LAT. CLEANOUT CASTING
7. 4" WASTEWATER PIPE (LENGTH VARIES)
8. ADAPTOR – NON SHEAR TYPE, DFW PLASTICS.
9. BUILDING SEWER LAT.
10. CLASS "B" CONCRETE (2000 PSI @ 28 DAYS)
11. COMPACTED AS SPECIFIED, OR INUNDATED SAND

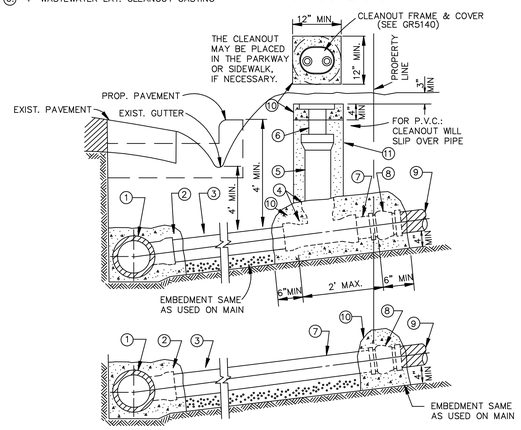

NOTES:

1. CLEANOUT CASTING TO BE FURNISHED AND PLACED PER SPECIAL CONDITIONS. IN VEHICLE TRAFFIC AREAS AND FOR COMMERCIAL MAINLINE LATERALS, WASTEWATER CLEANOUT SHALL BE OF CAST IRON.
2. SLOPE OF LATERAL TO BE 2% MIN. UNLESS INSTRUCTED OTHERWISE BY CITY.
3. THE WASTEWATER LATERAL SHALL BE CONNECTED TO BUILDING LATERAL AND CONSTRUCTED IN SUCH MANNER AS TO CLEAR EXISTING UTILITES AND PROPOSED FACILITIES SUCH AS STORM SEWER MAINS, PAVING, SIDEWALKS, RETAINING WALLS, ETC. VERTICAL BENDS (22.5° MAX.) MAY BE USED IF APPROVED BY CITY.
4. THE MAINLINE LATERAL CONNECTION TO THE PRIVATE BUILDING LATERAL SHALL BE AS CLOSE TO THE PROPERTY LINE AS POSSIBLE.
5. INSTALL 4" STOPPER OR CAP AT PROPERTY LINE IF BUILDING LATERAL DOES NOT EXIST.
6. THE CLEANOUT STACK & CASTING MAY BE PLACED IN THE PARKWAY, VEHICLE TRAFFIC AREAS, OR SIDEWALK, IF NECESSARY.

WASTEWATER LATERALS WITH & WITHOUT CLEANOUT

STANDARD DRAWING NO.
GR5120A

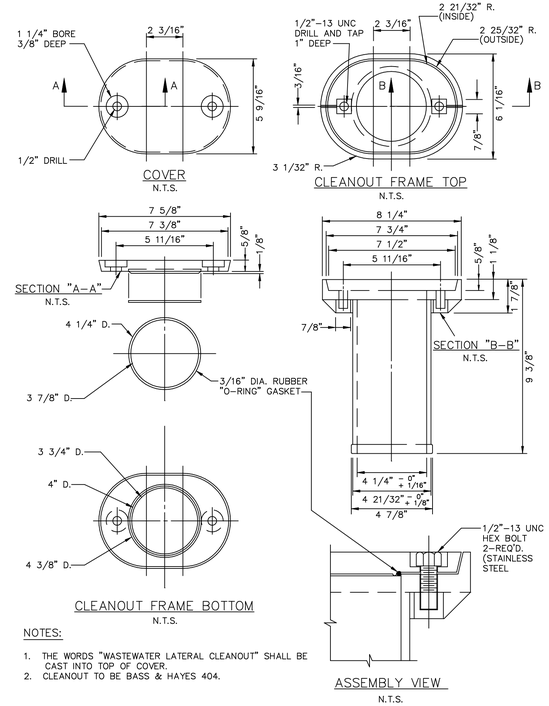

NOTES:

1. THE WORDS "WASTEWATER LATERAL CLEANOUT" SHALL BE CAST INTO TOP OF COVER.
2. CLEANOUT TO BE BASS & HAYES 404.

WASTEWATER LATERAL CLEANOUT FRAME & COVER

STANDARD DRAWING NO.
GR5140

KEY:

1. WASTEWATER MAIN
2. MANHOLE (SEE GR5020)
3. 6" MIN. SDR 35 WASTEWATER LATERAL. (LENGTH VARIES)
4. ADAPTOR – NON SHEAR TYPE; DFW PLASTICS OR CAP IF NO BUILDING LATERAL EXIST.
5. BUILDING SEWER LATERAL.

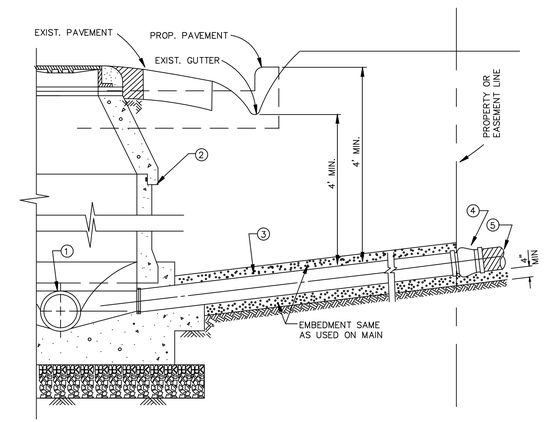

NOTES:

1. SLOPE OF LATERAL TO BE 2% MIN. UNLESS INSTRUCTED OTHERWISE BY CITY.
2. THE WASTEWATER LATERAL SHALL BE CONNECTED TO BUILDING LATERAL AND CONSTRUCTED IN SUCH MANNER AS TO CLEAR EXISTING UTILITES AND PROPOSED FACILITIES SUCH AS STORM SEWER MAINS, PAVING, SIDEWALKS, RETAINING WALLS, ETC. VERTICAL BENDS (22.5° MAX.) MAY BE USED IF APPROVED BY CITY.
3. THE MAINLINE LATERAL CONNECTION TO THE PRIVATE BUILDING LATERAL SHALL BE AS CLOSE TO THE PROPERTY LINE AS POSSIBLE.
4. INSTALL STOPPER OR CAP (SAME SIZE AS LATERALS) AT PROPERTY LINE IF BUILDING LATERAL DOES NOT EXIST. IF LATERAL DOES EXIST, INSTALL NON SHEAR CONNECTION.

WASTEWATER LATERALS COMMERCIAL CONNECTIONS

STANDARD DRAWING NO.
GR5120B

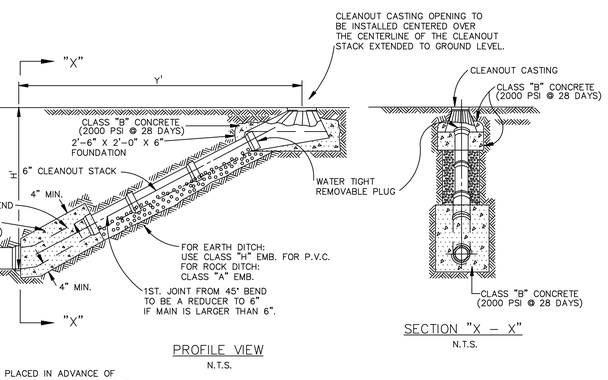

NOTE:

1. IF CLEANOUT IS PLACED IN ADVANCE OF PAVEMENT PLACE SAND AROUND CLEANOUT CASTING IN LIEU OF CLASS "B" CONCRETE.
2. CLEANOUT MAY BE LOCATED AT END OF MAIN ONLY IF LESS THAN 150 FEET TO MANHOLE.

WASTEWATER MAIN CLEANOUT

STANDARD DRAWING NO.
GR5110

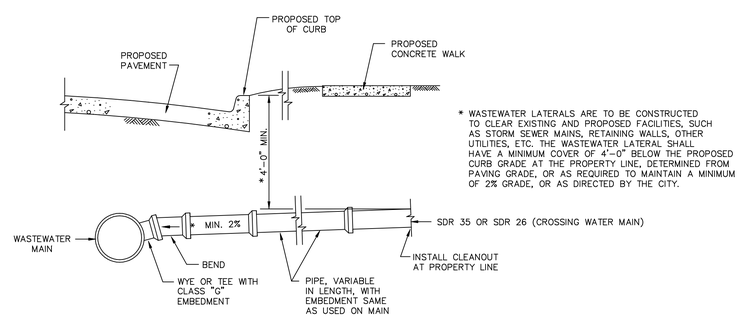

* WASTEWATER LATERALS ARE TO BE CONSTRUCTED TO CLEAR EXISTING AND PROPOSED FACILITIES, SUCH AS STORM SEWER MAINS, RETAINING WALLS, OTHER UTILITIES, ETC. THE WASTEWATER LATERAL SHALL HAVE A MINIMUM COVER OF 4'-0" BELOW THE PROPOSED CURB GRADE AT THE PROPERTY LINE, DETERMINED FROM PAVING GRADE, OR AS REQUIRED TO MAINTAIN A MINIMUM OF 2% GRADE, OR AS DIRECTED BY THE CITY.

WASTEWATER LATERAL STUBOUT
(FOR FUTURE CONNECTION, 4" AS SPECIFIED)
N.T.S.

WASTEWATER LATERAL STUBOUT IN ADVANCE OF PAVING

STANDARD DRAWING NO.
GR5150

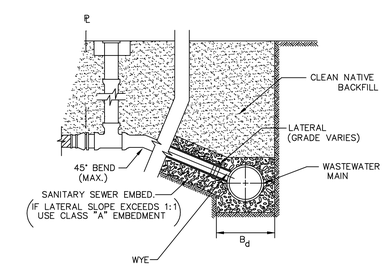

TRENCH WITH SLOPING SIDES
N.T.S.

NOTES:

1. WYE SHALL BE SUPPORTED AS SHOWN FOR WYE CONNECTION SUPPORT.
2. LATERALS ARE TO CLEAR ALL EXISTING UTILITIES. 45° MAX BENDS MAY BE REQUIRED.

WASTEWATER LATERAL CONNECTION

STANDARD DRAWING NO.
GR5130

CITY OF GRAPEVINE, TEXAS

SANITARY SEWER DETAILS

GRAPEVINE TEXAS

SANITARY SEWER DETAILS - 2
LATERALS & CLEANOUTS

REVISIONS		
CREATED, 4/13/98		SHEET NO.

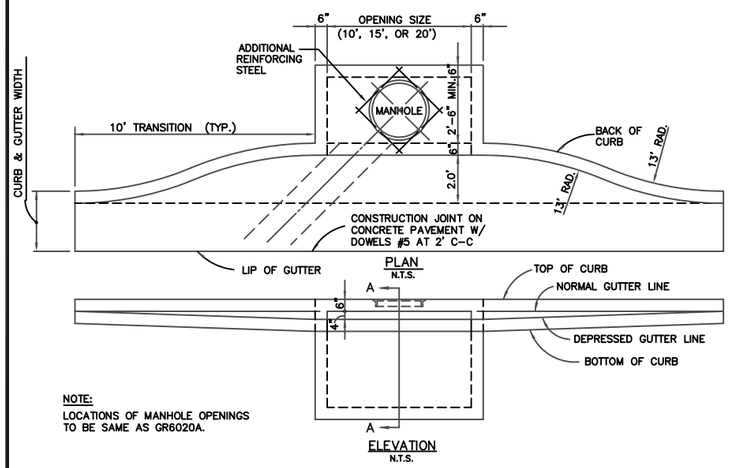

NOTE:
LOCATIONS OF MANHOLE OPENINGS TO BE SAME AS GR6020A.

CURB INLET RECESSED
10', 15' OR 20' OPENING

STANDARD DRAWING NO.
GR6030A

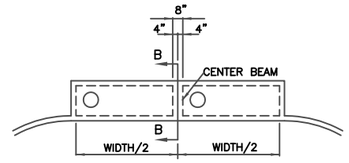

CENTER BEAM FOR
15' AND 20' INLETS
N.T.S.

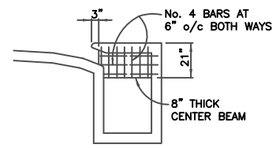

SECTION B-B
N.T.S.

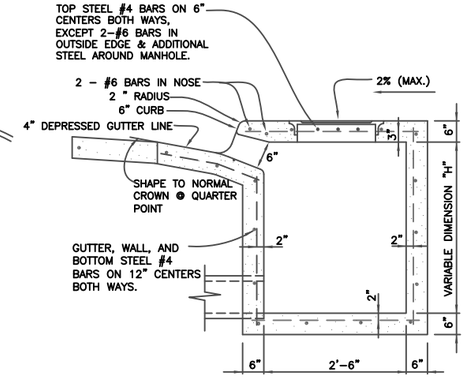

SECTION A-A
N.T.S.

CURB INLET RECESSED
CROSS SECTION & CENTER BEAM

STANDARD DRAWING NO.
GR6030B

GENERAL NOTES:

1. IN GENERAL, REINFORCING STEEL SHALL BE #4 BARS ON 12" CENTERS BOTH WAYS FOR GUTTER, BOTTOM SLAB ENDS, FRONT AND BACK WALLS, AND #4 BARS ON 6" CENTERS BOTH WAYS FOR TOP SLAB. AN ADDITIONAL #6 BAR SHALL BE PLACED IN THE FRONT EDGE OF THE TOP SLAB IN THE INLETS AND ADDITIONAL REINFORCING STEEL SHALL BE PLACED AROUND MANHOLES AS SHOWN.
2. ALL REINFORCING STEEL SHALL BE GRADE 60.
3. ALL CONCRETE SHALL HAVE A MIN. COMPRESSIVE STRENGTH OF 3000 PSI @ 28 DAYS. (CLASS "A" CONCRETE)
4. ALL REINFORCING STEEL SHALL HAVE A MINIMUM COVER OF 2" TO THE CENTERS OF THE BARS.
5. 10'-0" OF EXISTING CURB AND GUTTER UPSTREAM AND 10'-0" OF EXISTING CURB AND GUTTER DOWNSTREAM SHALL BE REMOVED AND REPOURED INTEGRALLY WITH EACH INLET.
6. ALL BACK FILLING SHALL BE PERFORMED BY MECHANICAL TAMPING TO 95% STANDARD PROCTOR DENSITY.
7. ALL EXPOSED CORNERS SHALL BE CHAMFERED 3/4".

STANDARD DRAWING NO.
6030D

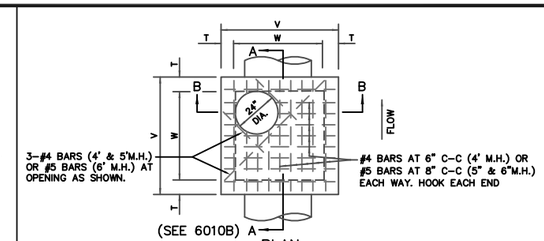

PLAN
N.T.S.

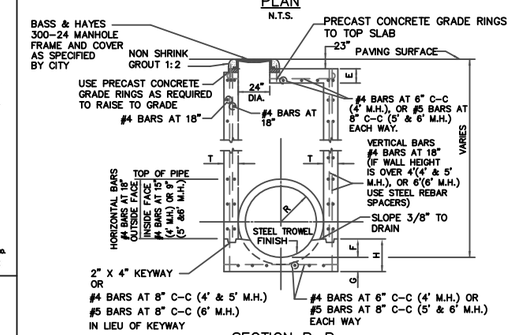

SECTION B-B
N.T.S.

NOTE
ROCK FOUNDATION SAME AS GR5020A.

M.H. SIZE(W)	V	T	E	F	G	H	MAX RCP SIZE (IN)
4'	5'-4"	8"	6"	9"	6"	1'-3"	36"
5'	6'-4"	8"	6"	12"	8"	1'-8"	45"
6'	7'-6"	9"	9"	16"	10"	2'-2"	54"

TABLE OF DIMENSIONS

STORMWATER MANHOLE
4', 5', OR 6' SQUARE

STANDARD DRAWING NO.
GR6010A

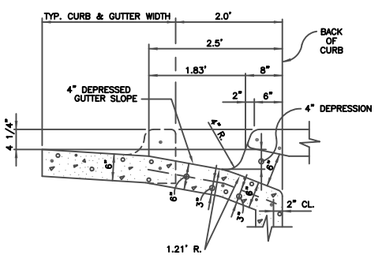

RECESSED INLET THROAT
N.T.S.

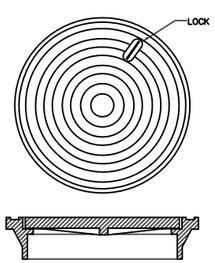

BASS & HAYES LOCKING RING & COVER 226-L OR APPROVED EQUAL.

CAST IRON
MANHOLE FRAME & COVER

N.T.S

STANDARD DRAWING NO.
GR6030C

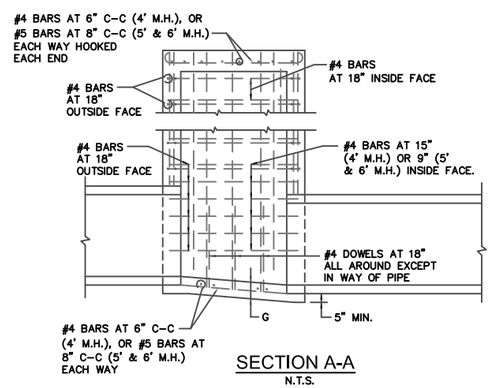

SECTION A-A
N.T.S.

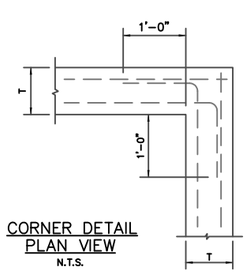

CORNER DETAIL
PLAN VIEW
N.T.S.

NOTES:

1. SLOPE INVERT OF MANHOLE AS INDICATED ON PLAN-PROFILE SHEET.
2. LAYERS OF REINFORCING STEEL NEAREST THE INTERIOR AND EXTERIOR SURFACE SHALL HAVE A COVER OF 2" TO THE CENTER OF BARS, UNLESS OTHERWISE NOTED.

STORMWATER MANHOLE
4', 5', OR 6' SQUARE

STANDARD DRAWING NO.
6010B

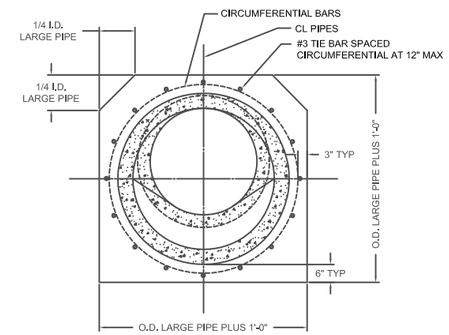

ELEVATION

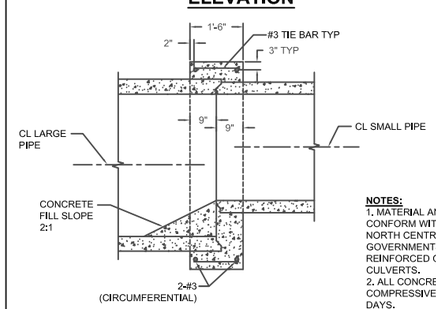

SECTION

NOTES:
1. MATERIAL AND WORKMANSHIP SHALL CONFORM WITH THE REQUIREMENTS OF THE NORTH CENTRAL TEXAS COUNCIL of GOVERNMENTS STANDARD SPECIFICATION ____ REINFORCED CONCRETE STORM DRAIN PIPE CULVERTS.
2. ALL CONCRETE SHALL HAVE A MINIMUM COMPRESSIVE STRENGTH f'c = 3,000 PSI AT 28 DAYS.
3. ALL REINFORCING STEEL SHALL BE GRADE 60.
4. PIPE INVERT ELEVATIONS SHALL BE SHOWN IN STORM DRAIN PLAN AND PROFILE. ENGINEER MAY MATCH PIPE RIMS. PIPE INVERTS, OR PIPE CENTERS. THE LARGEST OF PIPE DIAMETERS WILL CONTROL CONCRETE COLLAR DIMENSIONS AS SHOWN IN THIS DETAIL.

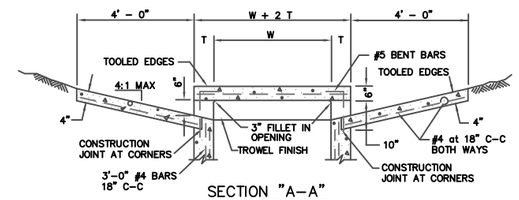

SECTION "A-A"
N.T.S.

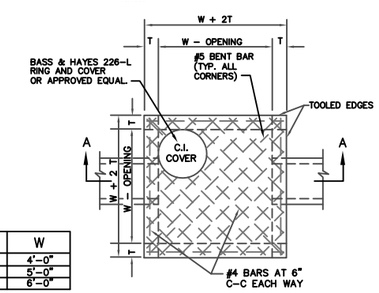

INLET SIZE	T	W
4' SQUARE	7"	4'-0"
5' SQUARE	8"	5'-0"
6' SQUARE	9"	6'-0"

PLAN OF TOP SLAB
N.T.S.

NOTES:

1. MATERIAL AND WORKMANSHIP SHALL CONFORM WITH THE REQUIREMENTS OF NCTCOG STANDARD SPECIFICATIONS FOR STANDARD CONCRETE MANHOLES.
2. LAYERS OF REINFORCING STEEL NEAREST THE INTERIOR AND EXTERIOR SURFACES SHALL HAVE A COVER OF 2" TO THE CENTER OF BARS, UNLESS OTHERWISE NOTED.
3. FOR DETAILS OF REINFORCING OF LOWER PORTIONS OF INLET SEE APPROPRIATE SQUARE MANHOLE DETAILS.
4. DEPTH OF DROP INLET FROM FINISHED GRADE TO FLOW LINE OF INLET IS VARIABLE. APPROXIMATE DEPTH WILL BE SHOWN ON PLANS AT LOCATION OF INLET.
5. ALL STANDARD DROP INLETS SHALL HAVE ONE OPENING ON EACH SIDE.
6. DECK MAY BE REINFORCED SAME AS 4' SQUARE MANHOLE.

DROP INLET
4', 5' OR 6' SQUARE

STANDARD DRAWING NO.
GR6040

STORM SEWER DETAILS

GRAPEVINE TEXAS

CITY OF GRAPEVINE, TEXAS

STORM SEWER DETAILS

REVISIONS		
6/30/08	JHT	
3/25/13	JHT	
5/13/13	JHT	
CREATED, 4/13/98		SHEET NO.

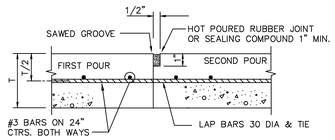

CONSTRUCTION JOINT

N.T.S.

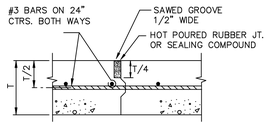

KEYWAY JOINT

(FOR PAVEMENT THICKNESS > 6")

N.T.S.

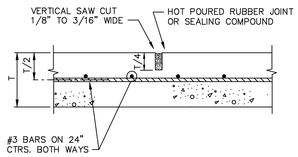

SAWED CONTRACTION JOINT

N.T.S.

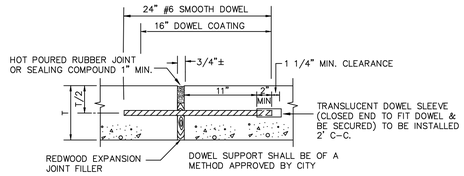

EXPANSION JOINT

(SPACED 600 FT. MAXIMUM; LOCATE AT STRUCTURES AND AT INTERSECTION P.C.'S & P.T.'S)

N.T.S.

REINFORCED CONCRETE PAVEMENT JOINTS

STANDARD DRAWING NO. GR2050

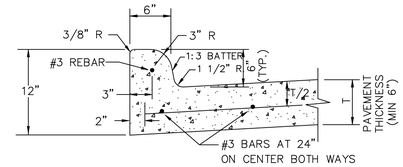

MONOLITHIC CURB & GUTTER

N.T.S.

NOTES:

1. REINFORCEMENT SHALL BE NO. 4 GRADE 60 REBAR
2. CONCRETE SHALL HAVE A MIN. COMP STRENGTH OF 3600 PSI @ 28 DAYS (CLASS "C" CONCRETE)
3. ALL CURBS ARE CONSTRUCTED OF PORTLAND CEMENT CONCRETE UNLESS OTHERWISE SHOWN.
4. GRADE SHALL BE MEASURED AT BACK OF CURB.

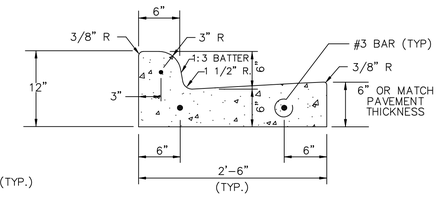

SEPARATE CURB & GUTTER

N.T.S.

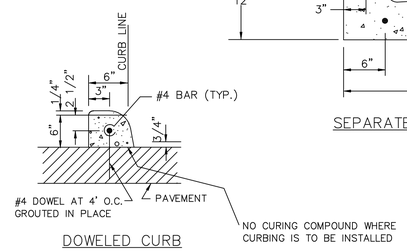

DOWELED CURB

N.T.S.

CONCRETE CURB & GUTTER INTEGRAL, SEPARATE, & DOWELED

STANDARD DRAWING NO. GR2120

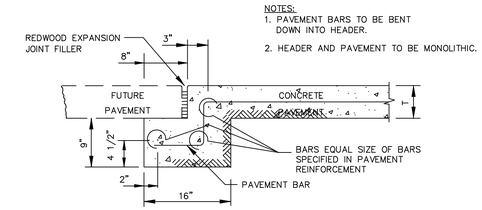

NOTES:

1. PAVEMENT BARS TO BE BENT DOWN INTO HEADER.
2. HEADER AND PAVEMENT TO BE MONOLITHIC.

STREET HEADER FOR FUTURE PAVEMENT

N.T.S.

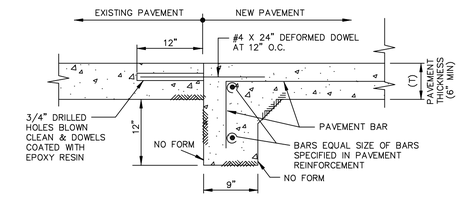

STREET HEADER AT EXISTING PAVEMENT

N.T.S.

REINFORCED CONCRETE PAVEMENT STREET HEADERS

STANDARD DRAWING NO. GR2070

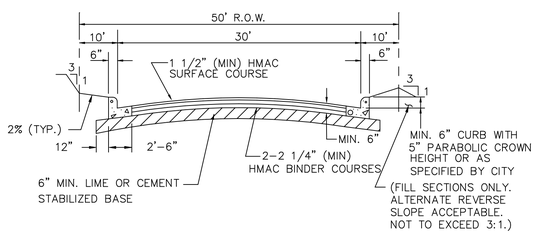

NOTES:

1. A SOIL INVESTIGATION FOR SUBGRADE DESIGN SHALL BE CONDUCTED BY A GEOTECHNICAL ENGINEER. THIS DESIGN SHALL BE APPROVED BY THE CITY PRIOR TO CONSTRUCTION.
2. WHERE FULL-DEPTH ASPHALTIC CONCRETE PAVEMENTS ARE BEING CONSIDERED FOR USE, THE ASPHALT CONCRETE THICKNESS SHALL BE BASED UPON NECESSARY SUBGRADE ANALYSES AND PAVEMENT THICKNESS DESIGN DETERMINATIONS AS APPROVED BY THE CITY. THICKNESSES SHOWN ARE TYPICAL.
3. TACK COAT BETWEEN COURSES AS REQUIRED.

HOT MIX ASPHALTIC CONCRETE PAVEMENT TYPE "G" STREET ONLY

N.T.S.

STANDARD DRAWING NO. GR2110

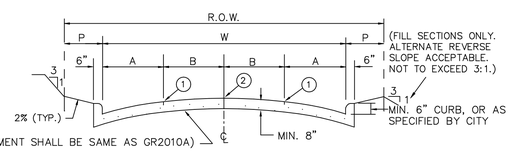

TYPE STREET	STREET WIDTH(W)	A	B	R.O.W. WIDTH	P	PARABOLIC CROWN HEIGHT ②	1/2 CROWN HEIGHT ①
F	40'	10'	10'	65' MIN.	VARIES	6"	4 1/2"
D, E	48'	12'	12'	75' MIN.	VARIES	7"	5 1/4"

TYPE "D" – MINOR ARTERIAL
TYPE "E" – COLLECTOR (APARTMENT, COMMERCIAL & INDUSTRIAL)
TYPE "F" – LOCAL COLLECTOR (SINGLE FAMILY, DUPLEX, APARTMENT, COMMERCIAL & INDUSTRIAL)

N.T.S.

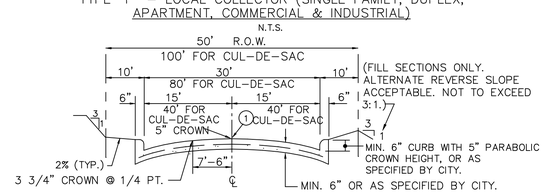

TYPE "G" – LOCAL RESIDENTIAL AND FIRE LANES

N.T.S.

① INDICATES SAWED LONGITUDAL CONTRACTION OR CONSTRUCTION JOINT.
② INDICATES KEYWAY CONSTRUCTION JOINT.

NOTES :

1. ALL REINFORCEMENT SHALL BE #3 GRADE 60 BARS ON 24" CENTERS BOTH WAYS, SUPPORTED WITH APPROPRIATE CHAIRS.
2. CONCRETE PAVEMENT SHALL HAVE A MINIMUM COMPRESSIVE STRENGTH OF 3600 PSI @ 28 DAYS (CLASS "C" CONCRETE) AS SPECIFIED BY THE CITY. AGGREGATES SHALL BE CLASS 3, ITEM 2.1.1. OF THE STANDARD SPECIFICATIONS.
3. WHERE REINFORCING BARS ARE SPLICED, A 30 DIAMETER LAP SHALL BE USED.
4. ON CONCRETE STREETS ALL INLETS SHALL BE SEPARATED FROM THE PAVEMENT AND CURB BY BOXING AROUND INLETS AS SHOWN ON CURB INLET DETAIL. EXPANSION JOINT MATERIAL SHALL EXTEND COMPLETELY THROUGH CURB AND SLAB. MANHOLE CASTINGS WITHIN THE LIMITS SHALL BE BOXED-OUT IN LIKE MANNER EXCEPT WHEN TELESCOPING-TYPE CASTINGS ARE USED. WHEN A JOINT FALLS WITHIN 5' OF ANY INLET, MANHOLE OR OTHER STRUCTURE, SHORTEN ONE OR MORE PANELS EITHER SIDE OF OPENING TO PERMIT JOINTS TO FALL ON ROUND STRUCTURES AND AT OR BETWEEN CORNERS OF RECTANGULAR STRUCTURES.
5. AN APPROVED WHITE PIGMENTED CURING COMPOUND SHALL BE APPLIED TO THE SURFACE OF THE CONCRETE AS SOON AS IT HAS BEEN PLACED AND FINISHED.
6. SUBGRADE SHALL BE PREPARED IN ACCORDANCE WITH A GEOTECHNICAL REPORT AND THE RECOMMENDATION OF A GEOTECHNICAL ENGINEER. MINIMUM LIME OR CEMENT TREATED SUBGRADE SHALL BE 7" IN DEPTH ON ALL ROADWAYS EXCEPT RESIDENTIAL STREETS WHICH SHALL BE 6" IN DEPTH.
7. BACKFILL BEHIND THE CURB SHALL BE COMPACTED TO A MINIMUM DENSITY OF 90% OF ASTM D-698.

REINFORCED CONCRETE PAVEMENT TYPE "D", "E", "F" AND "G" STREETS

STANDARD DRAWING NO. GR2031

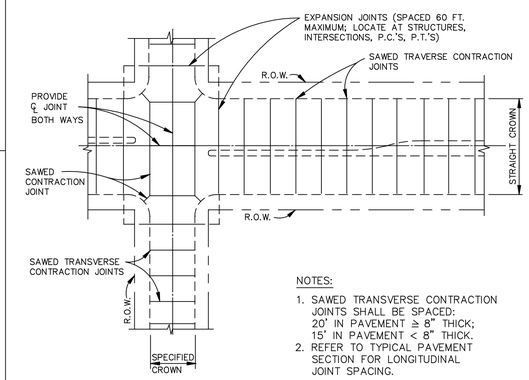

NOTES:

1. SAWED TRANSVERSE CONTRACTION JOINTS SHALL BE SPACED: 20' IN PAVEMENT ≥ 8" THICK; 15' IN PAVEMENT < 8" THICK.
2. REFER TO TYPICAL PAVEMENT SECTION FOR LONGITUDINAL JOINT SPACING.

N.T.S.

REINFORCED CONCRETE PAVEMENT TRANSVERSE JOINT SPACING

STANDARD DRAWING NO. GR2060

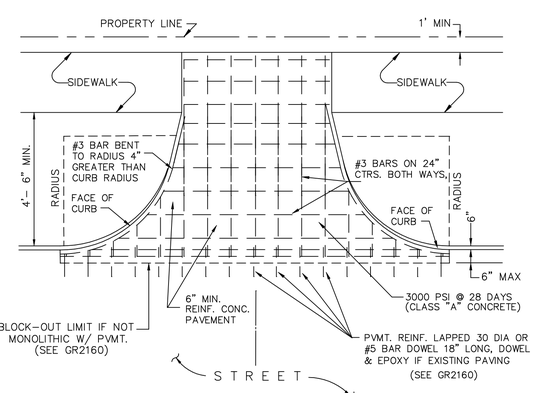

NOTE:

DRIVEWAY DIMENSIONS AND LOCATIONS SHALL COMPLY WITH SECTION 20-44 OF THE CODE OF ORDINANCES.

PLAN VIEW

N.T.S.

DRIVEWAY APPROACH – RADIUS RETURN TYPE

STANDARD DRAWING NO. GR2150

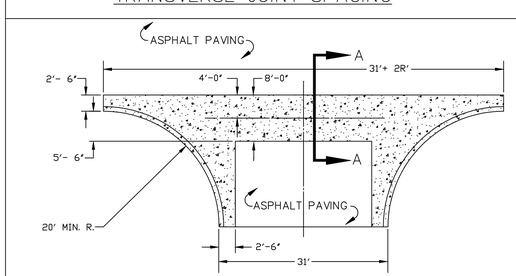

PLAN

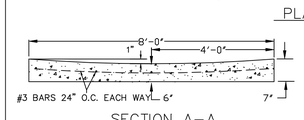

SECTION A–A

ALL CONCRETE FOR VALLEY GUTTERS SHALL HAVE A MIN. COMP. STRENGTH OF 3600 PSI @ 28 DAYS (CLASS "C" CONCRETE) REINFORCING STEEL SHALL BE NO. 3 BARS ON 24" CENTERS BOTH WAYS. SUBGRADE SHALL BE THE SAME AS H.M.A.C. STREET.

REINFORCED CONCRETE PAVEMENT VALLEY GUTTER

STANDARD DRAWING NO. GR2041

PAVING DETAILS

CITY OF GRAPEVINE, TEXAS

PAVING DETAILS

REVISIONS

CREATED, 4/13/98

SHEET NO.

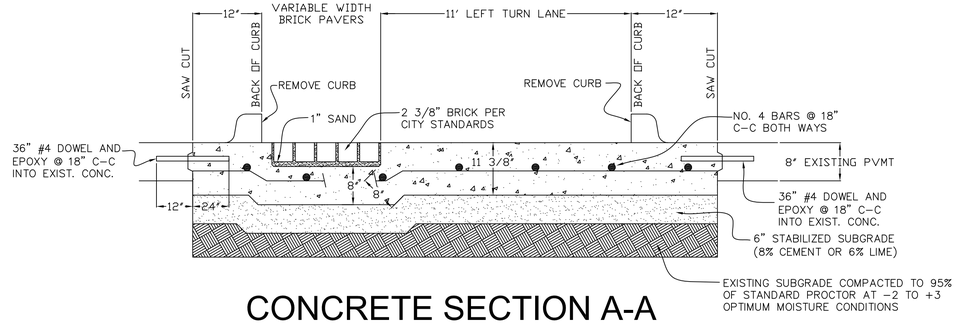

CONCRETE SECTION A-A

N.T.S.

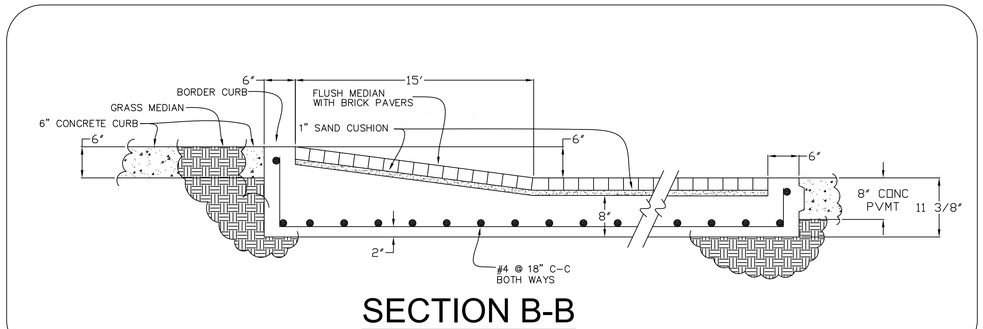

SECTION B-B

N.T.S.

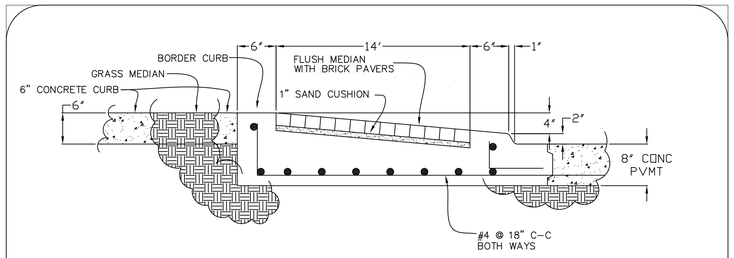

SECTION C-C

N.T.S.

NOTE: EQUIVALENT SECTIONS CERTIFIED BY A GEOTECHNICAL ENGINEER MAY BE SUBMITTED BY THE CONTRACTOR AND MUST BE APPROVED BY THE CITY PRIOR TO CONSTRUCTION.

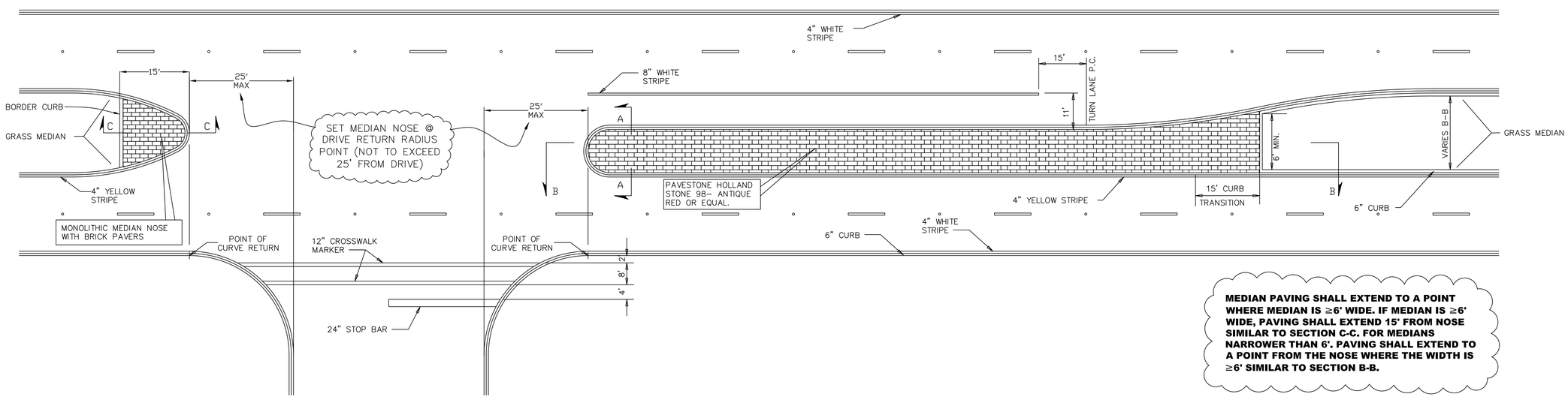

MEDIAN PAVING SHALL EXTEND TO A POINT WHERE MEDIAN IS ≥6' WIDE. IF MEDIAN IS ≥6' WIDE, PAVING SHALL EXTEND 15' FROM NOSE SIMILAR TO SECTION C-C. FOR MEDIANS NARROWER THAN 6'. PAVING SHALL EXTEND TO A POINT FROM THE NOSE WHERE THE WIDTH IS ≥6' SIMILAR TO SECTION B-B.

LEFT TURN - FLUSH MEDIAN WITH BRICK PAVERS

N.T.S.

NOTE: CONCRETE PAVEMENT MUST BE PLACED WITHIN 14 DAYS OF EXCAVATION. CONCRETE PVMT. TO BE 5,000psi.

FLUSH MEDIAN RECONSTRUCTION DETAILS

CITY OF GRAPEVINE, TEXAS

PAVEMENT DETAILS

REVISIONS		
5/20/11	JHT	
8/24/11	JHT	

CREATED, 3/4/02

SHEET NO.

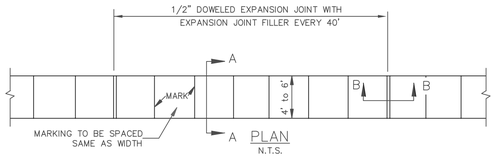

PLAN
N.T.S.

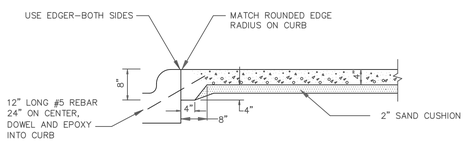

JOINT LUG DETAIL FOR MEDIAN PAVEMENT
OR SIDEWALK ADJACENT TO CURB
N.T.S.

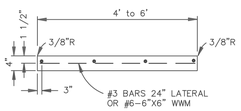

SECTION "A-A"
N.T.S.

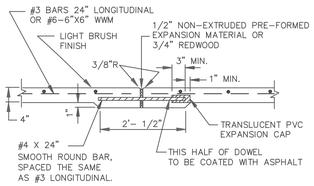

SECTION "B-B"
N.T.S.

REINFORCED CONCRETE SIDEWALKS
JOINTS AND SPACING

STANDARD DRAWING NO.
GR2170A

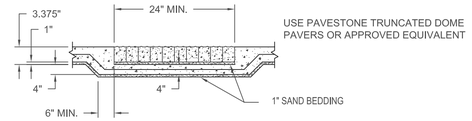

TYP. TRUNCATED DOME PAVER CROSS SECTION
N.T.S.

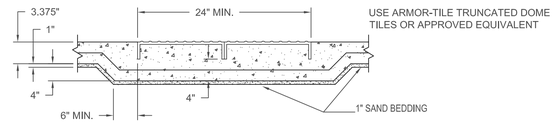

TYP. ARMOR-TILE TRUNCATED DOME
CAST IN PLACE TILE CROSS SECTION
N.T.S.

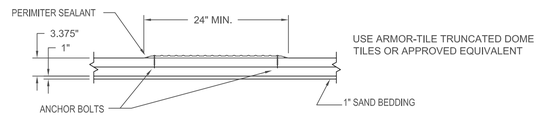

TYP. ARMOR-TILE TRUNCATED DOME
SURFACE APPLIED TILE CROSS SECTION
N.T.S.

USE FACTORY SPECIFICATIONS FOR
INSTALLING ALL TRUNCATED DOMES OR
APPROVED EQUIVALENT

NOTES:

1. CROSS SLOPE OF SIDEWALK SHALL BE 2% MAXIMUM.
2. SIDEWALK WIDTH SHALL BE SPECIFIED BY THE CITY.
3. CONCRETE FOR SIDEWALKS SHALL HAVE A MINIMUM COMPRESSIVE STRENGTH OF 3000 PSI @ 28 DAYS (CLASS "A" CONCRETE)
4. ALL HONEYCOMB IN BACK OF CURB TO BE TROWEL-PLASTERED BEFORE POURING SIDEWALK.
5. LUG MAY BE FORMED BY SHAPING SUBGRADE TO APPROXIMATE DIMENSIONS SHOWN.
6. SIDEWALK WIDTHS: RESIDENTIAL – 4', COMMERCIAL – 5' MIN.
7. ALL BARRIER FREE RAMPS MUST MEET ALL AMERICAN DISABILITY ACT REQUIREMENTS.
8. TRUNCATED DOME PATTERN SHALL BE 24 INCHES IN DEPTH, EXTENDING THE FULL WIDTH OF THE RAMP.
9. THE TRUNCATED DOME PATTERN SHALL BEGIN 6 TO 8 INCHES BEHIND PROJECTED BACK-OF-CURB LINE AND SHALL BE AN INTEGRAL PART OF THE WALKING SURFACE.
10. DOMES SHALL BE ARRANGED ON A SQUARE GRID, ALIGNED PERPENDICULAR TO THE BACK-OF-CURB.

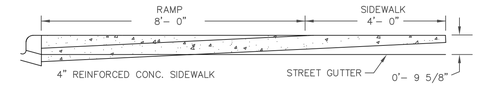

SECTION A-A
N.T.S.

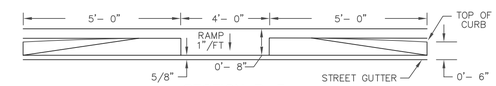

SECTION B-B
N.T.S.

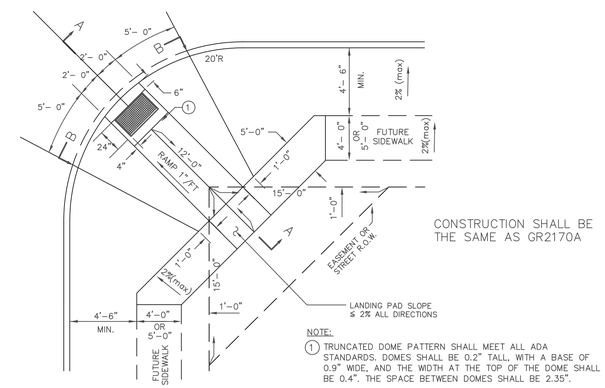

CONSTRUCTION SHALL BE
THE SAME AS GR2170A

NOTE:
1 TRUNCATED DOME PATTERN SHALL MEET ALL ADA STANDARDS. DOMES SHALL BE 0.2" TALL, WTH A BASE OF 0.9" WIDE, AND THE WIDTH AT THE TOP OF THE DOME SHALL BE 0.4". THE SPACE BETWEEN DOMES SHALL BE 2.35".

BARRIER FREE RAMP AT MINOR INTERSECTION
N.T.S.

BARRIER FREE RAMPS
20' RADIUS

STANDARD DRAWING NO.
GR2170B

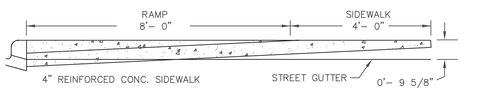

SECTION A-A
N.T.S.

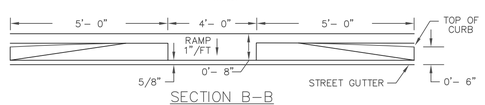

SECTION B-B
N.T.S.

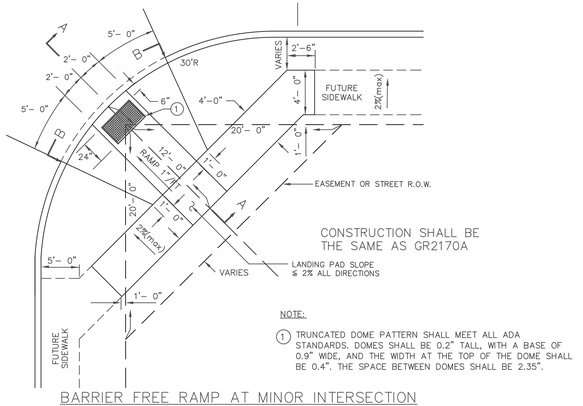

CONSTRUCTION SHALL BE
THE SAME AS GR2170A

NOTE:
1 TRUNCATED DOME PATTERN SHALL MEET ALL ADA STANDARDS. DOMES SHALL BE 0.2" TALL, WITH A BASE OF 0.9" WIDE, AND THE WIDTH AT THE TOP OF THE DOME SHALL BE 0.4". THE SPACE BETWEEN DOMES SHALL BE 2.35".

BARRIER FREE RAMP AT MINOR INTERSECTION
N.T.S.

BARRIER FREE RAMPS
30' RADIUS

STANDARD DRAWING NO.
GR2170C

GENERAL NOTES

1. THE TRUNCATED DOME PATTERN SHALL BE 24 INCHES IN DEPTH, EXTENDING THE FLL WIDTH OF THE RAMP.
2. THE TRUNCATED DOME PATTERN SHALL BEGIN 6 TO 8 INCHES BEHIND PROJECTED BACK-OF-CURB LINE AND SHALL BE AN INTERGRAL PART OF THE WALKING SURFACE.
3. DOMES SHALL BE ARRANGED ON A SQUARE GRID, ALIGNED PERPENDICULAR TO THE BACK-OF-CURB.
4. BARRIER FREE RAMPS SHALL BE CONSTRUCTED IN ACCORANCE WITH THE ADA ASSESSIBILITY GUIDELINES.
5. THIS DETAIL TYPICAL FOR "RETROFITTED" RAMPS.
6. MINIMUM DIMENSIONS SHOWN FOR TRUNCATED PATTERN AREA SHALL BE CONSTRUCTED WITHOUT CUTTING ANY OF THE PATTERNED PAVERS (WHEN USING PRECAST PAVERS) OR PREMADE TILES (WHEN USING ARMOR-TILE TILES OR EQUIVALANT).
7. DO NOT DOWEL INTO THE BACK OF CURBS.
8. APPROVED TRUNCATED DOME APPLICATIONS SHALL BE: ARMOR-TILE ADA-C-1212, ARMOR-TILE ADA-S-1212, ARMOR-TILE ADA-S-2424, PAVESTONE DETECTABLE WARNING PAVERS.
9. ALL ARMOR-TILE APPLICATIONS SHALL BE IN THE BRICK RED (FEDERAL NO. 22144 COLOR).
10. USE MANUFACTURER'S APPROVED METHOD OF INSTALLATION ON ALL PRODUCTS.

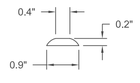

DETAIL "D"

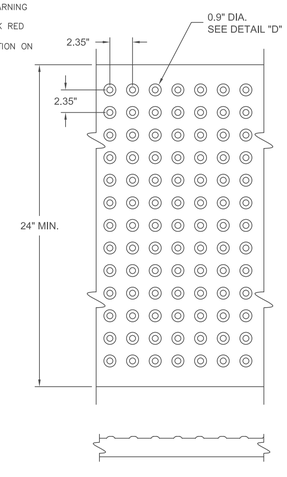

TRUNCATED DOME PATTERN

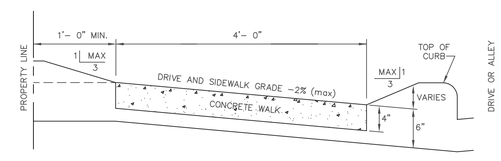

SECTION A-A
N.T.S.

CONSTRUCTION SHALL BE
THE SAME AS GR2170A

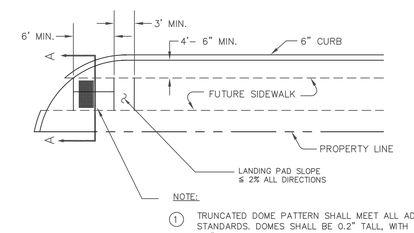

NOTE:
1 TRUNCATED DOME PATTERN SHALL MEET ALL ADA STANDARDS. DOMES SHALL BE 0.2" TALL, WITH A BASE OF 0.9" WIDE, AND THE WIDTH AT THE TOP OF THE DOME SHALL BE 0.4". THE SPACE BETWEEN DOMES SHALL BE 2.35".

BARRIER FREE RAMP AT DRIVEWAY OR ALLEY
N.T.S.

BARRIER FREE RAMPS
30' RADIUS

STANDARD DRAWING NO.
GR2170D

SIDEWALK DETAILS

GRAPEVINE TEXAS

CITY OF GRAPEVINE, TEXAS

SIDEWALK DETAILS

REVISIONS		
7/14/08	JHT	
10/9/08	JHT	
CREATED, 4/13/98		SHEET NO.